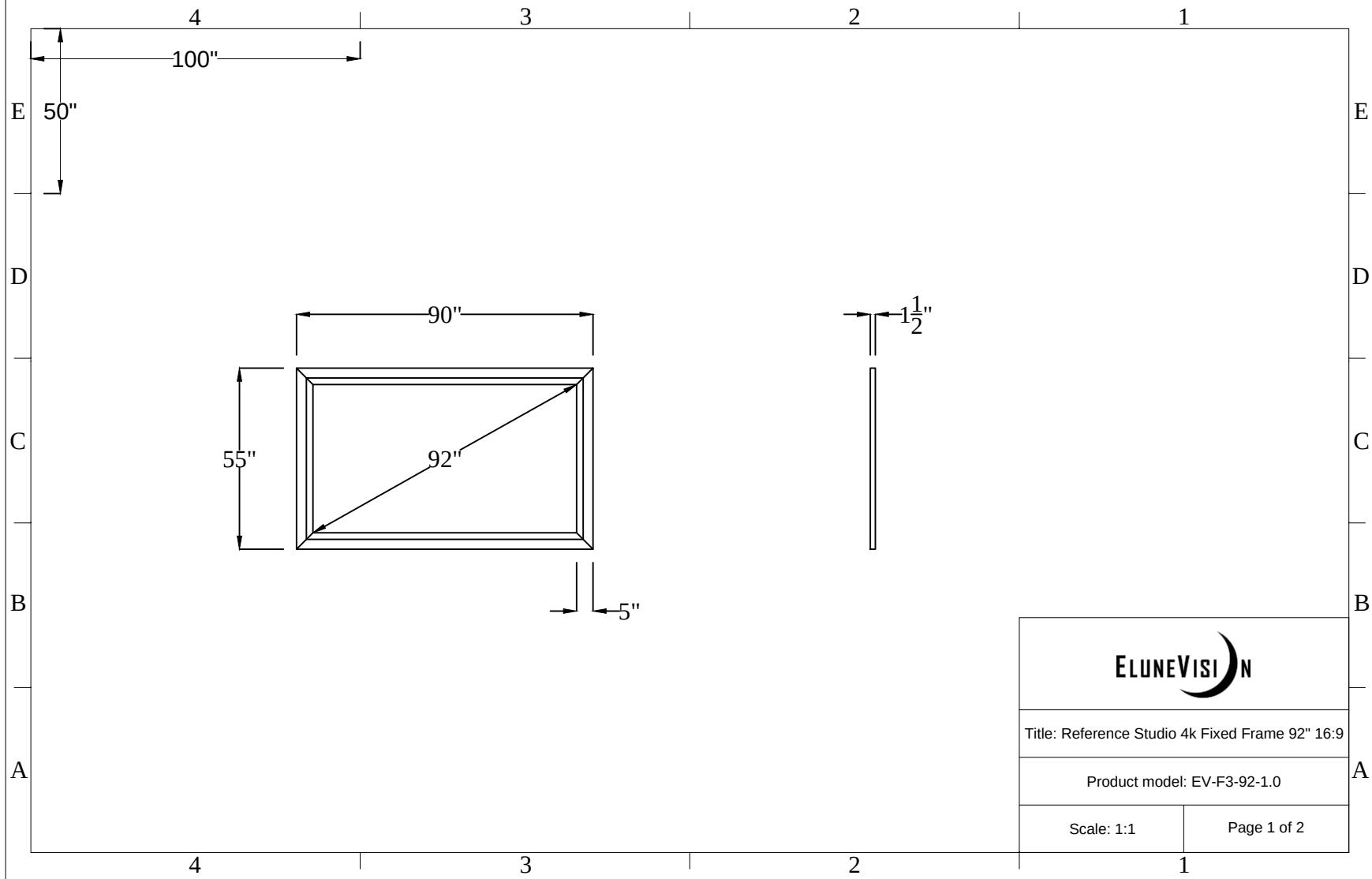

ELUNEVISION

Title: Reference Studio 4k Fixed Frame 92" 16:9

Product model: EV-F3-92-1.0

Scale: 1:1

Page 1 of 2

Mounting Bracket

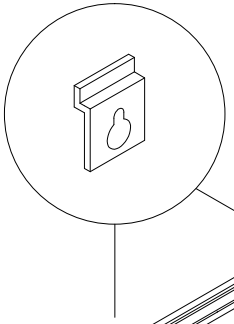

Mounting Diagram

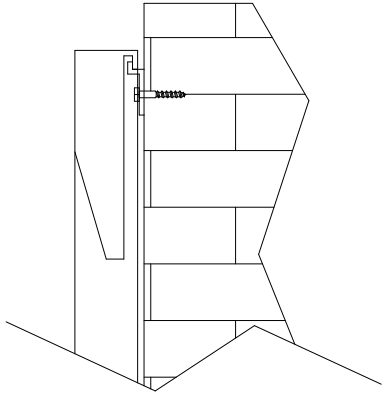

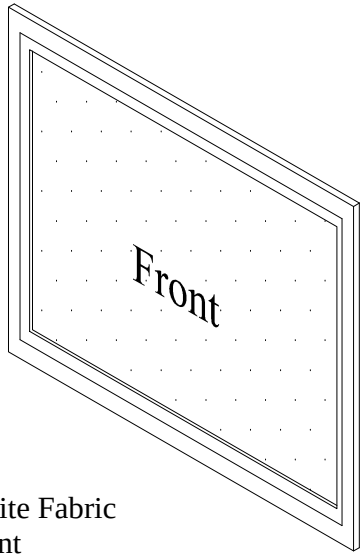

White Fabric Front

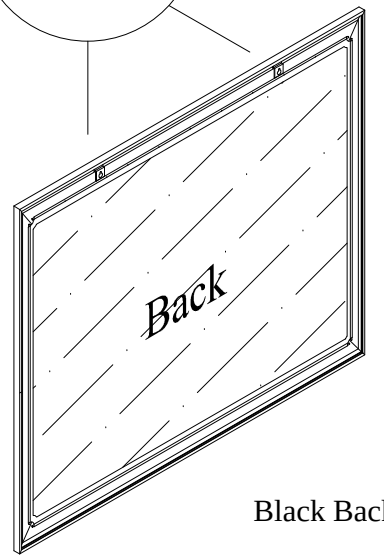

Black Backing

ELUNEVISION

Title: Reference Studio 4k Fixed Frame 92" 16:9

Product model: EV-F3-92-1.0

Not to Scale
Not to Proportion