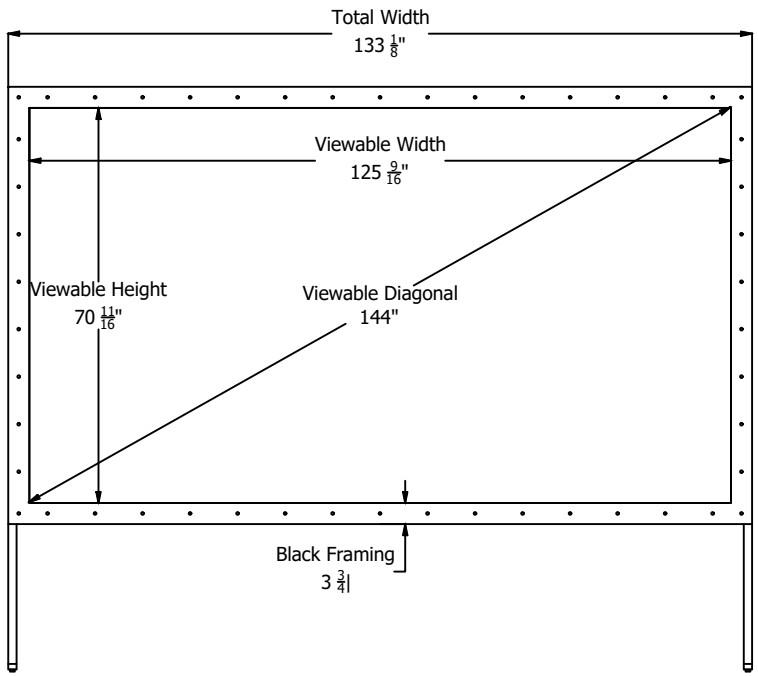

Front View

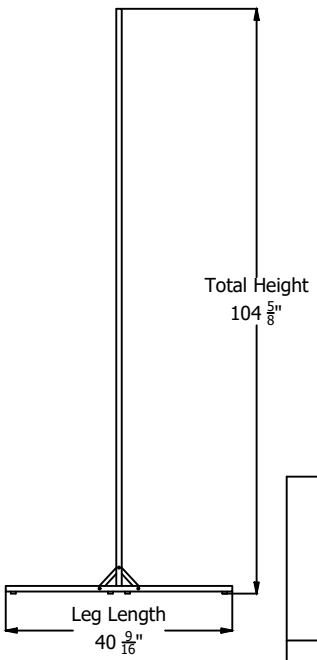

Side View

ELUNEVISION

Movie Master 144" 16:9

Product Model: EV-MM-144-1.2

not to scale

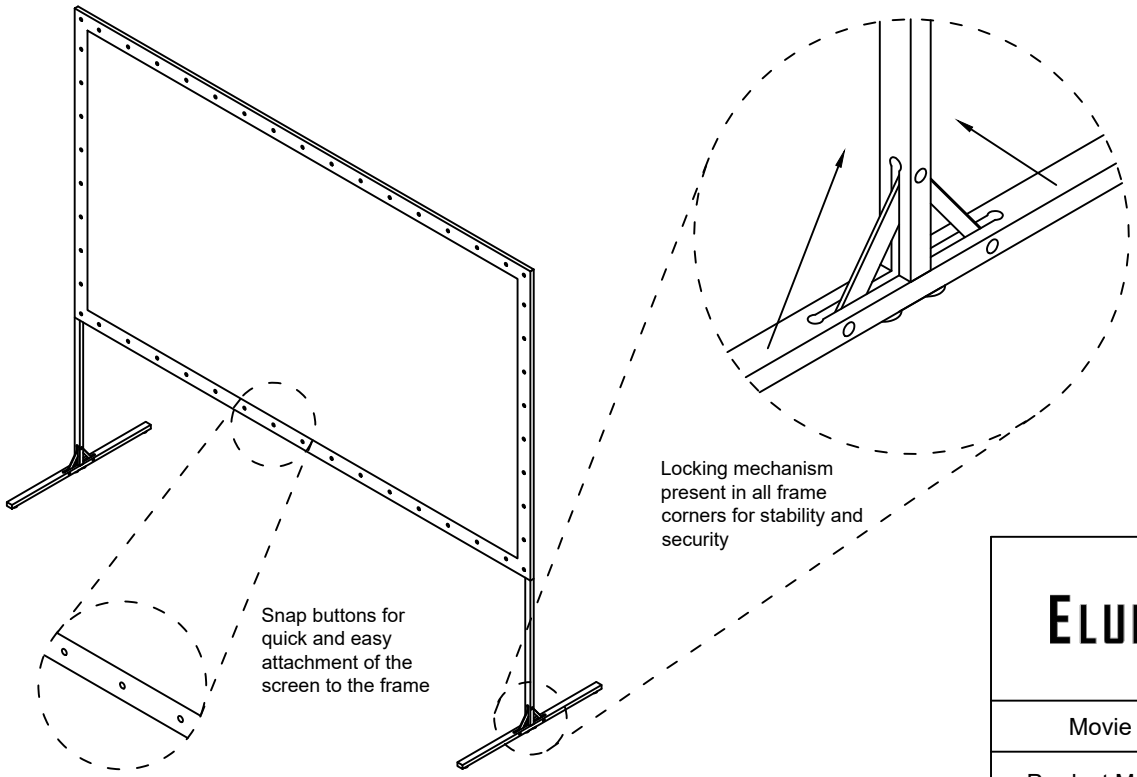

ELUNEVISION

Movie Master 144" 16:9

Product Model: EV-MM-144-1.2

not to scale