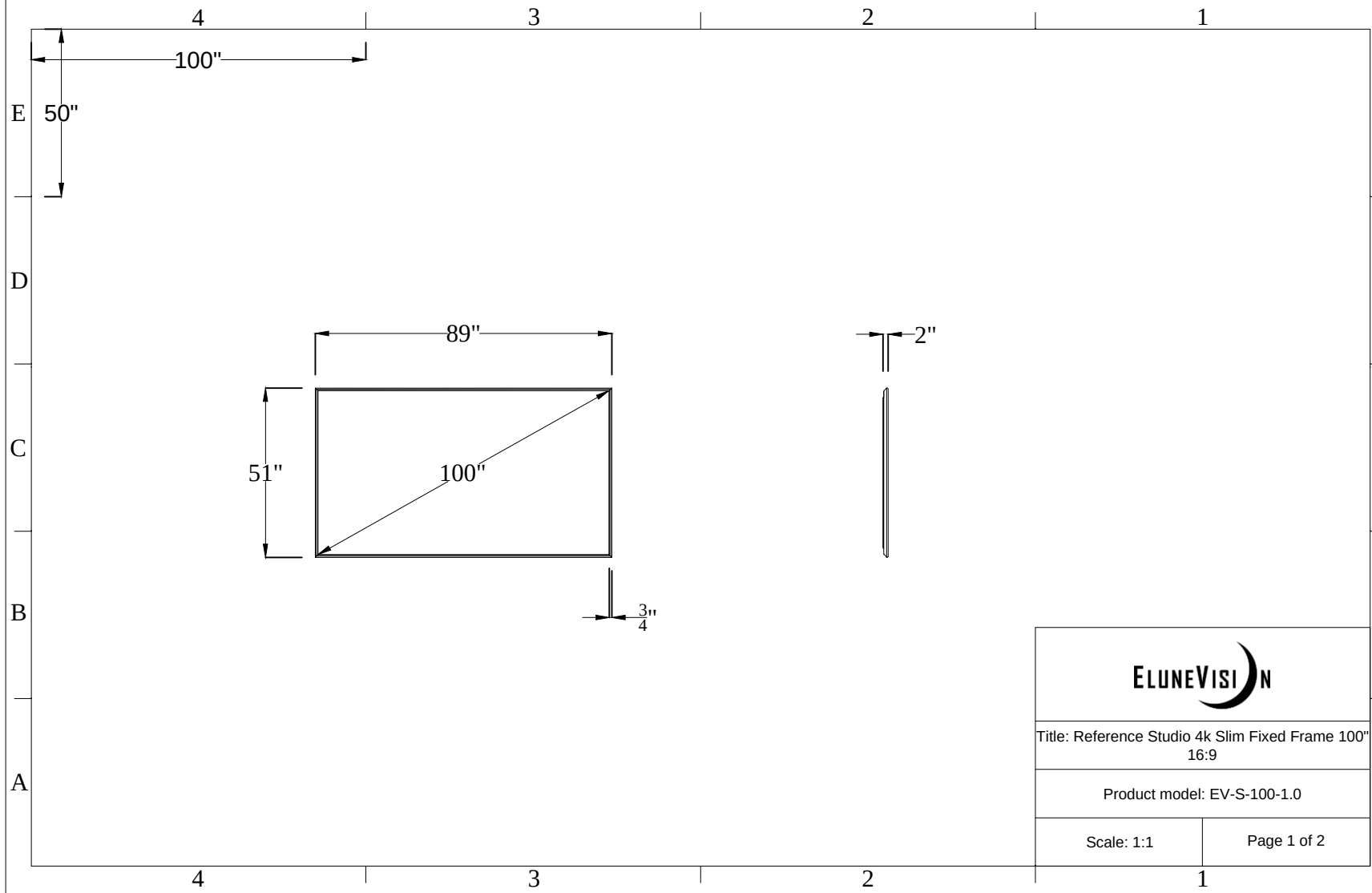

ELUNEVISION

Title: Reference Studio 4k Slim Fixed Frame 100" 16:9

Product model: EV-S-100-1.0

Scale: 1:1

Page 1 of 2

Mounting Diagram

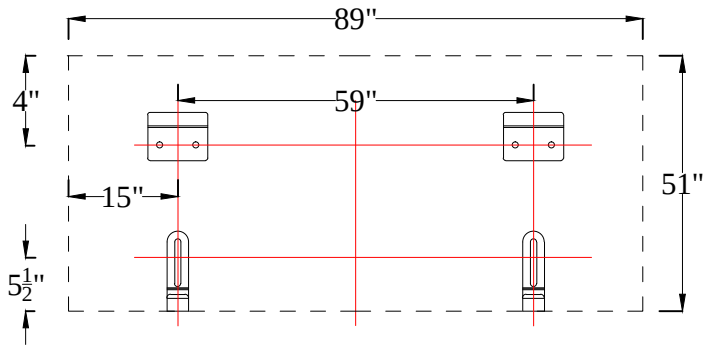

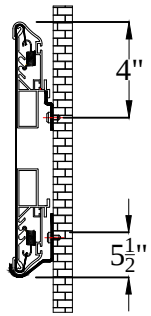

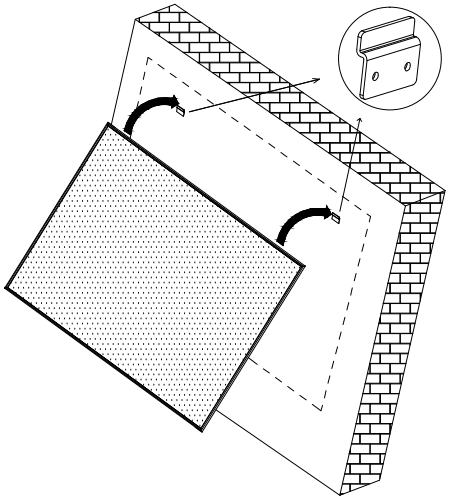

ELUNEVISION

Title: Reference Studio 4k Slim Fixed Frame 100" 16:9

Product model: EV-S-100-1.0

Not to Scale
Not to Proportion