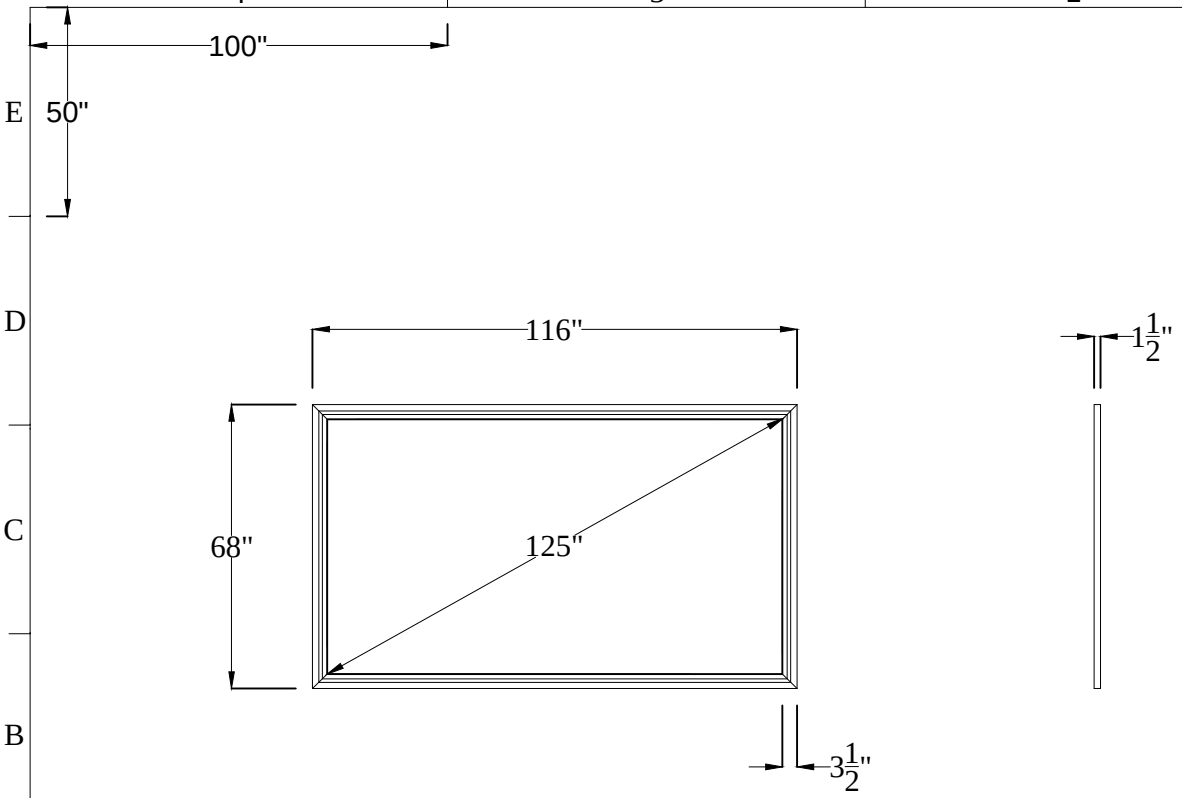

ELUNEVISION

Title: Reference Studio 4k Fixed Frame Audio Weave 125" 16:9

Product model: EV-F3AW-125-16:9-1.15

Scale: 1:1

Page 1 of 2

Mounting Bracket

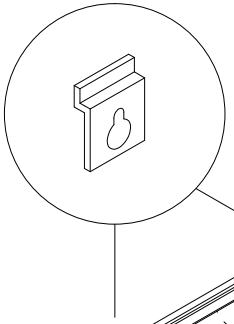

Mounting Diagram

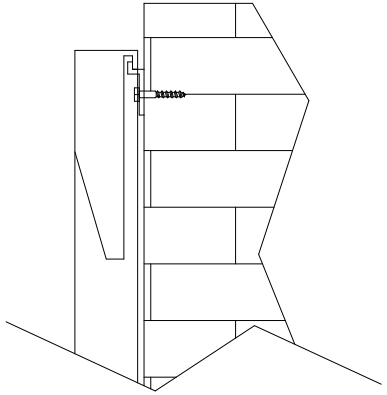

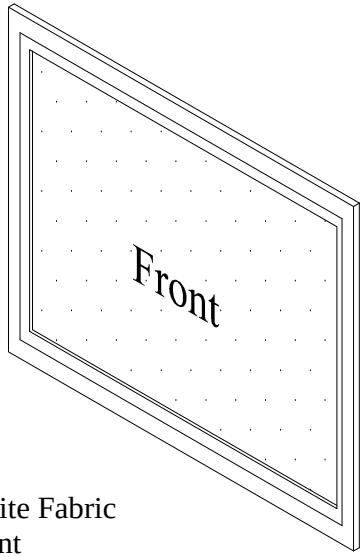

White Fabric Front

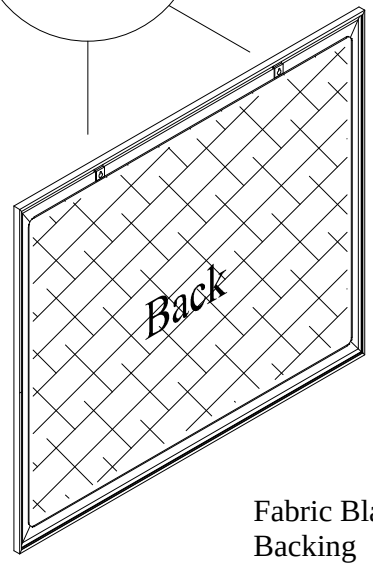

Fabric Black Backing

ELUNEVISION

Title: Reference Studio 4k Fixed Frame Audio Weave 125" 16:9

Product model: EV-F3AW-125-16:9-1.15

Not to Scale
Not to Proportion