Extended View

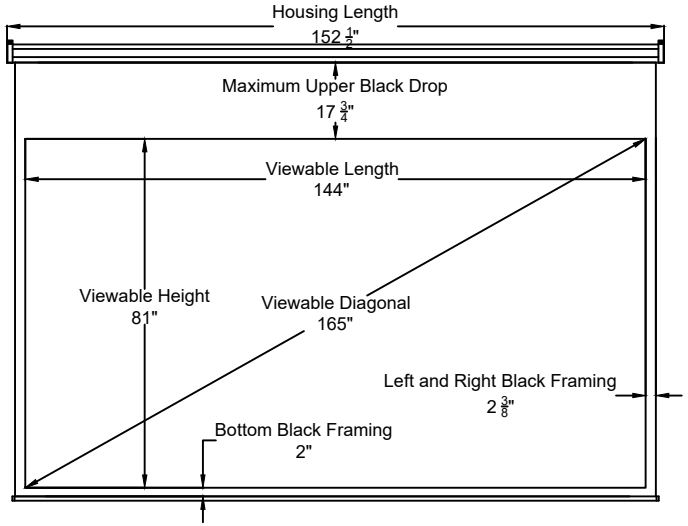

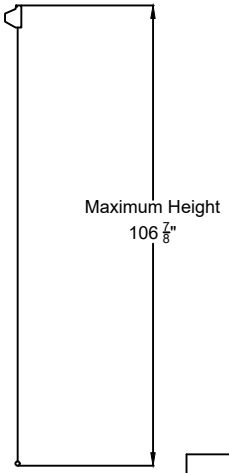

Retracted View

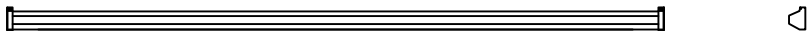

ELUNEVISION

Professional Large Motorized Screen 165" 16:9

Product Model: EV-LM-165-1.2

not to scale

Left-handed Housing

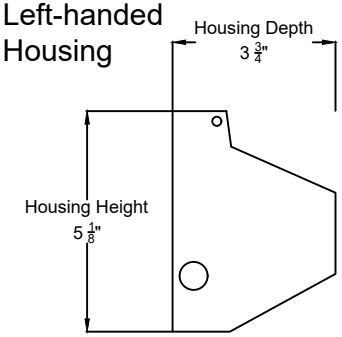

Wall Mounting

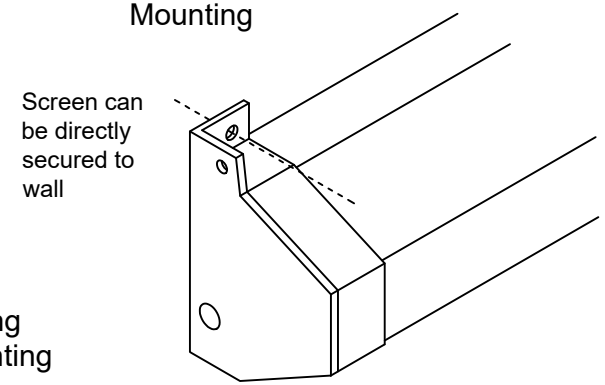

Ceiling Mounting

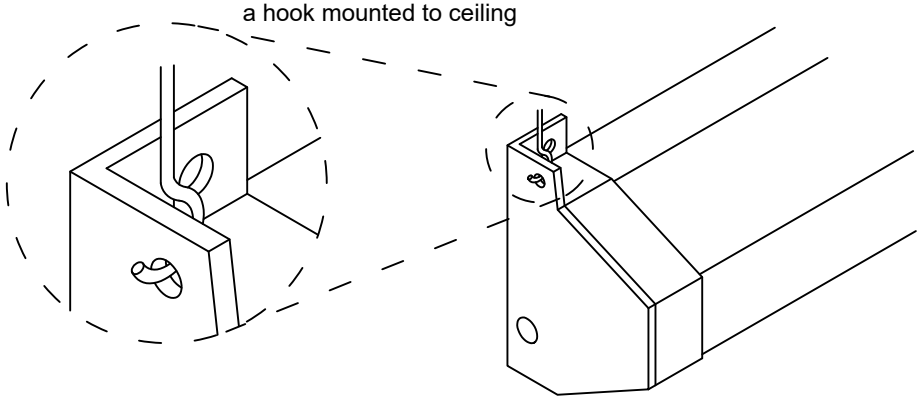

ELUNEVISION

Professional Large Motorized Screen 165" 16:9

Product Model: EV-LM-165-1.2

not to scale	Page 2 of 2