Extended View

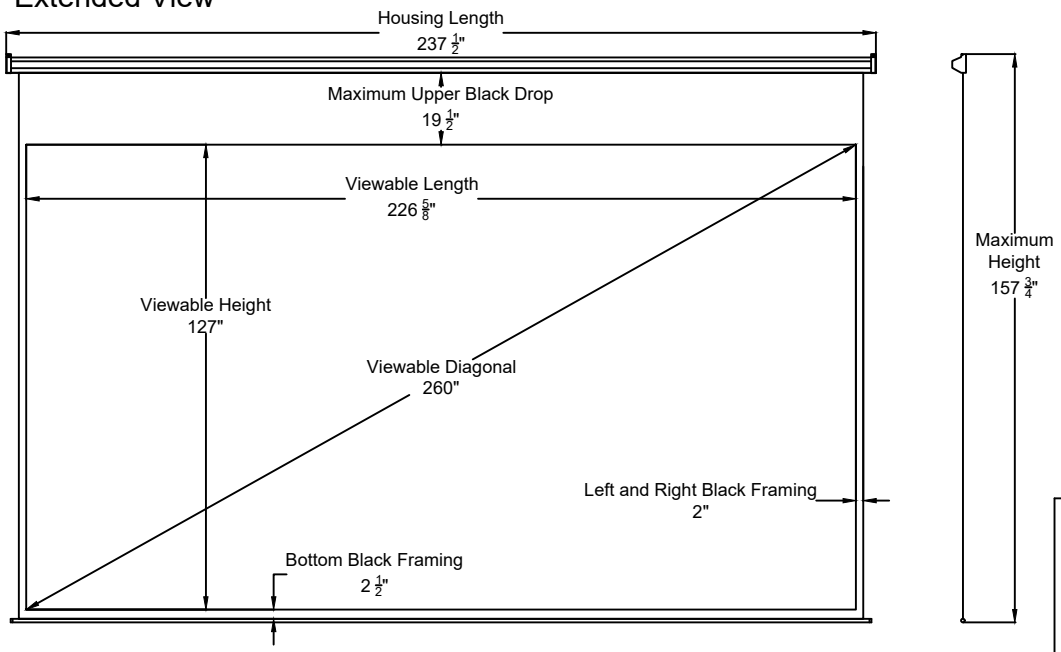

Retracted View

ELUNEVISION

Professional Large Motorized Screen 260" 16:9

Product Model: EV-LM-260-1.2

not to scale

Left-handed Housing

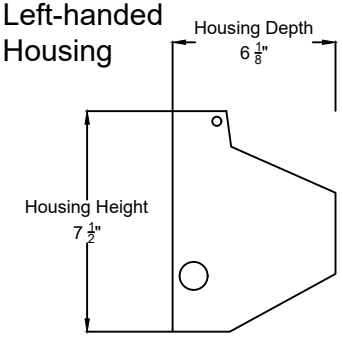

Wall Mounting

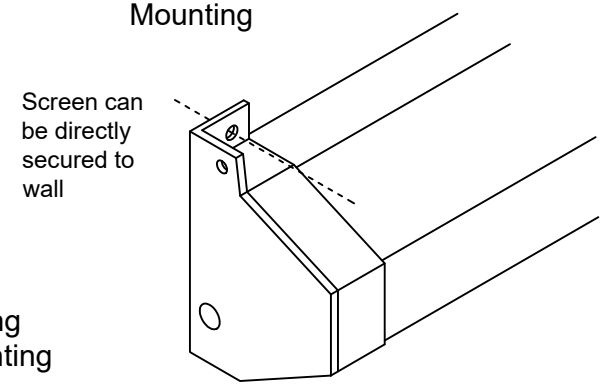

Ceiling Mounting

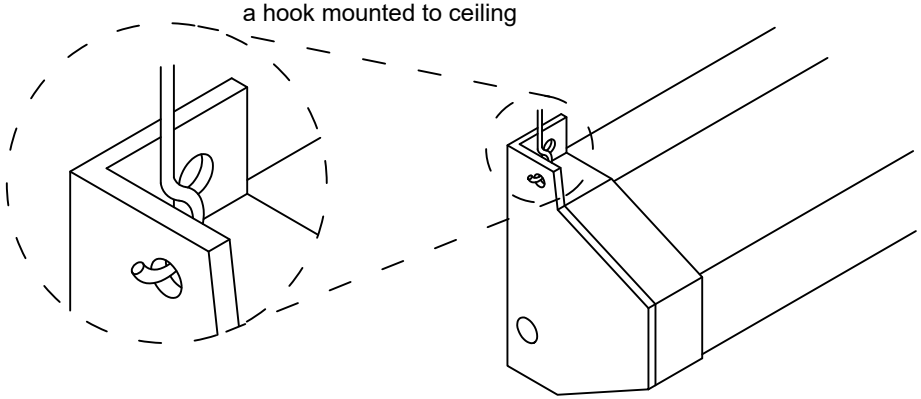

ELUNEVISION

Professional Large Motorized Screen 260" 16:9

Product Model: EV-LM-260-1.2

not to scale	Page 2 of 2