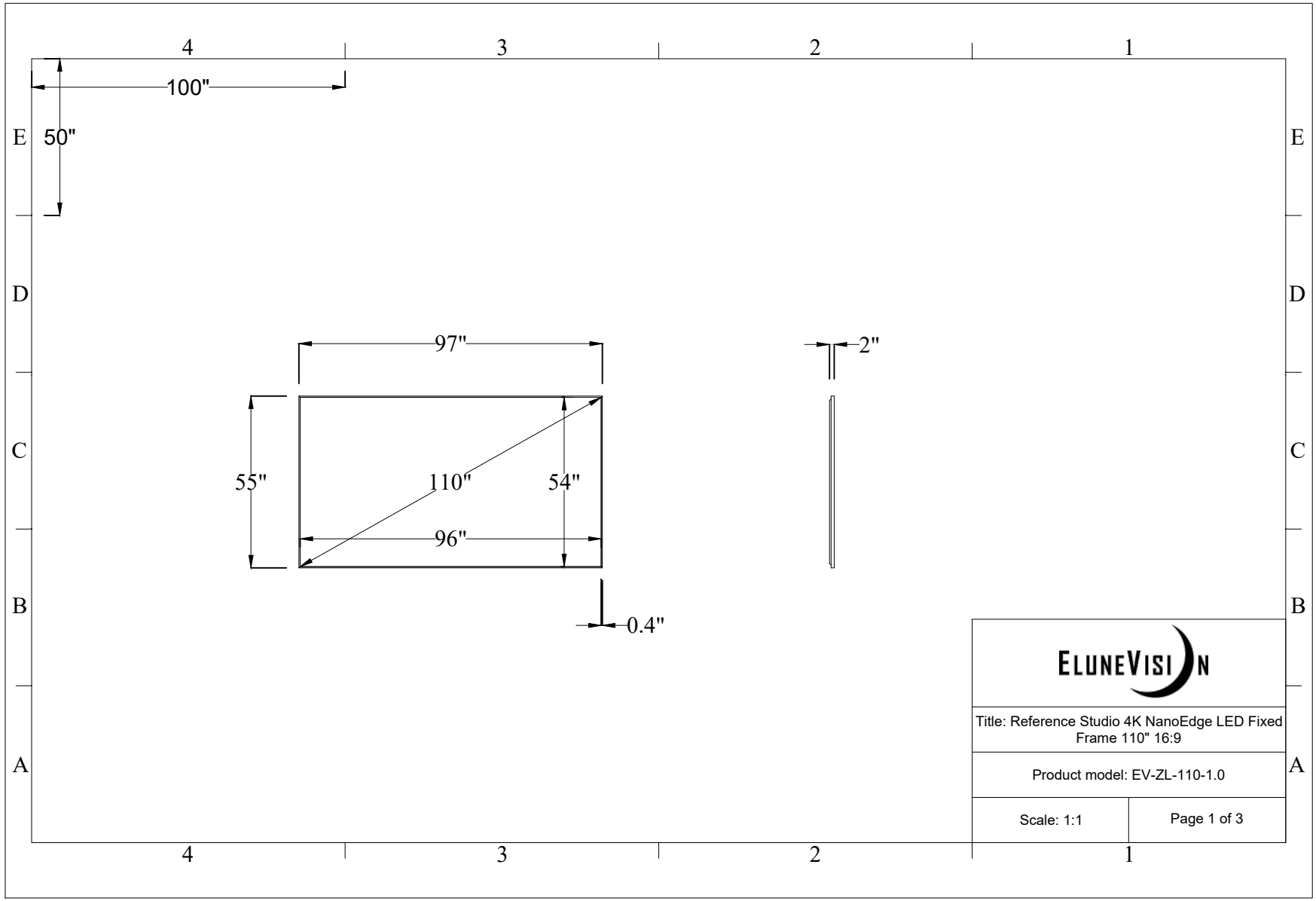

ELUNEVISION

Title: Reference Studio 4K NanoEdge LED Fixed Frame 110" 16:9

Product model: EV-ZL-110-1.0

Scale: 1:1

LED Lighting Kit

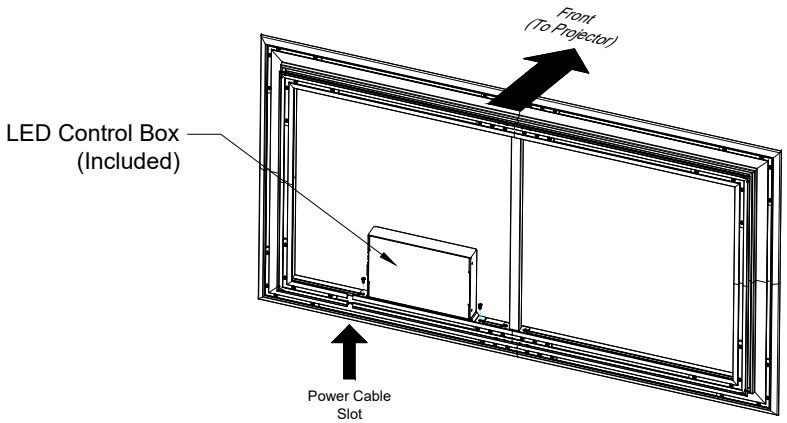

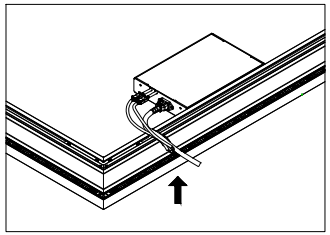

If the user does not have an available power supply directly behind the screen, a slot is available for the user to feed the power cable through the lower portion of the frame.

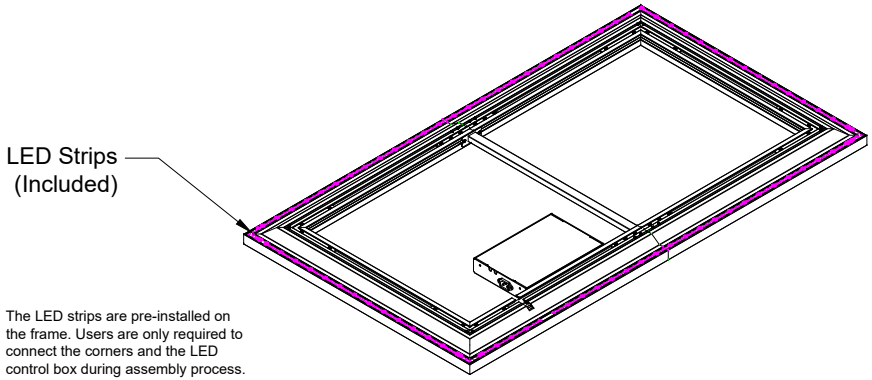

The LED strips are pre-installed on the frame. Users are only required to connect the corners and the LED control box during assembly process.

ELUNEVISION

Title: Reference Studio 4K NanoEdge LED Fixed Frame 110" 16:9

Product model: EV-ZL-110-1.0

Not to Scale
Not to Proportion

Mounting Diagram

The holes used to mount the top bracket should be 4 $\frac{1}{2}$" from the top of the screen frame.

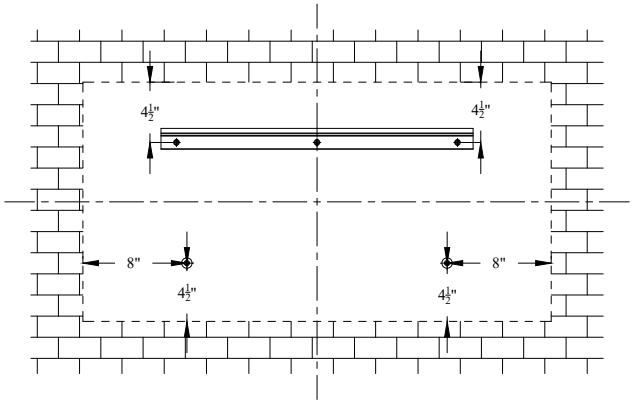

The holes used to mount the support magnets should be 4 $\frac{1}{2}$" from the bottom and 8" from the sides of the screen frame.

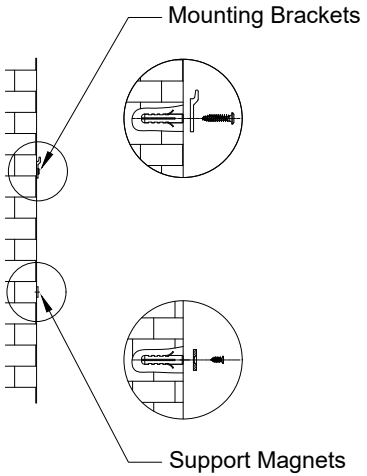

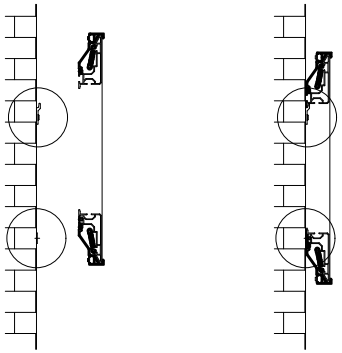

Support magnets are designed for users to keep their screens completely parallel to the wall they are mounted on.
It can also be used to make the screen vertical when the user's wall is not flat.

ELUNEVISION

Title: Reference Studio 4K NanoEdge LED Fixed Frame 110" 16:9

Product model: EV-ZL-110-1.0

Not to Scale
Not to Proportion