Extended View

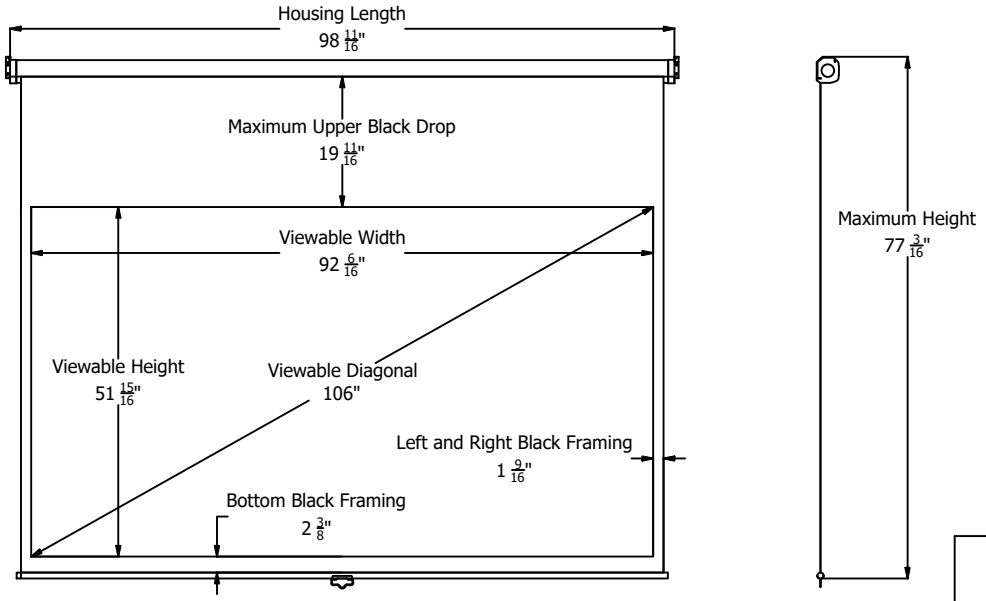


Retracted View

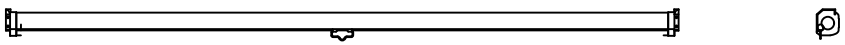

| | |
|---|---|
| ELUNEVISION | |
| Atlas Controlled Return Mechanism Screen 106" 16:9 | |
| Product Model: EV-M2-106-1.2 | |
| not to scale | Page 1 of 2 |

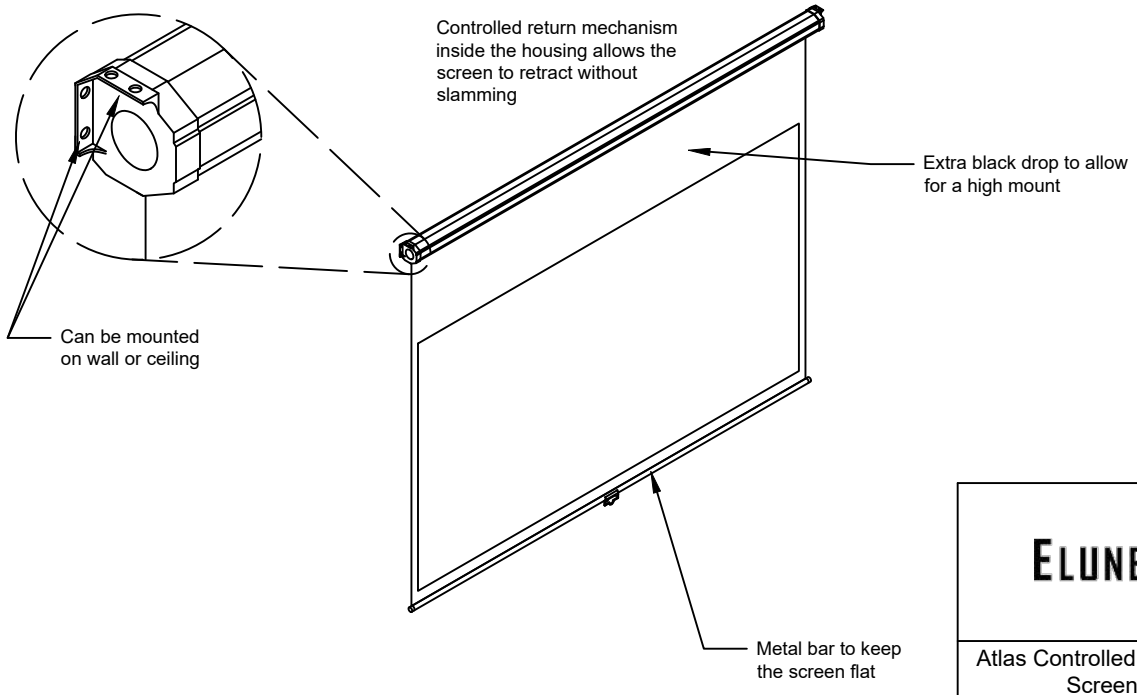


ELUNEVISION

Atlas Controlled Return Mechanism
Screen 106" 16:9

Product Model: EV-M2-106-1.2

not to scale