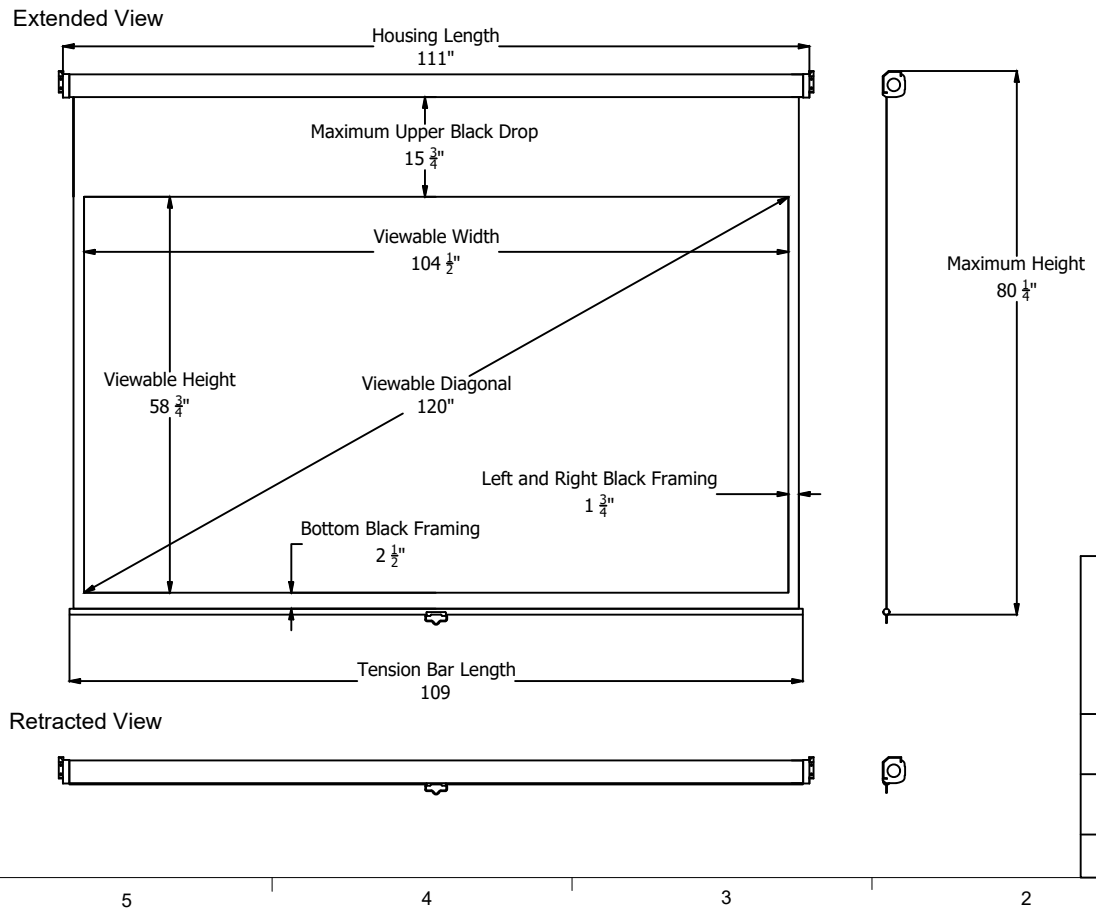

ELUNEVISION

Atlas Controlled Return Mechanism
Screen 120" 16:9

Product Model: EV-M2-120-1.2

not to scale

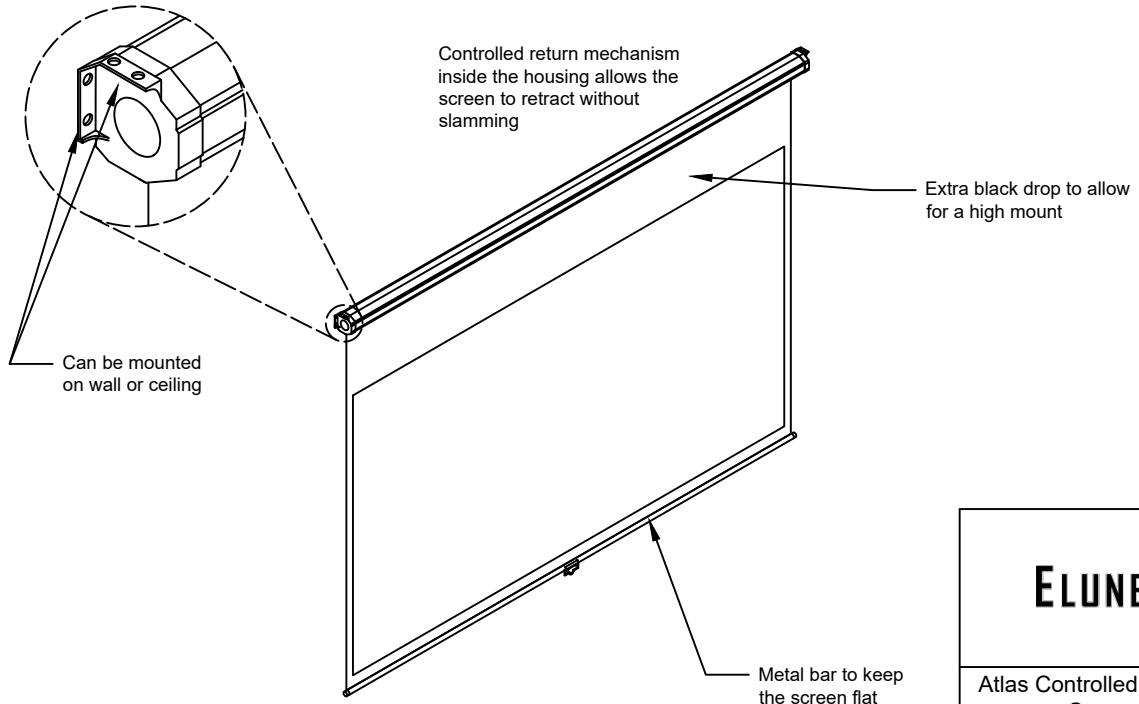

ELUNEVISION

Atlas Controlled Return Mechanism
Screen 120" 16:9

Product Model: EV-M2-120-1.2

not to scale