Frame Overview
Minimum Height

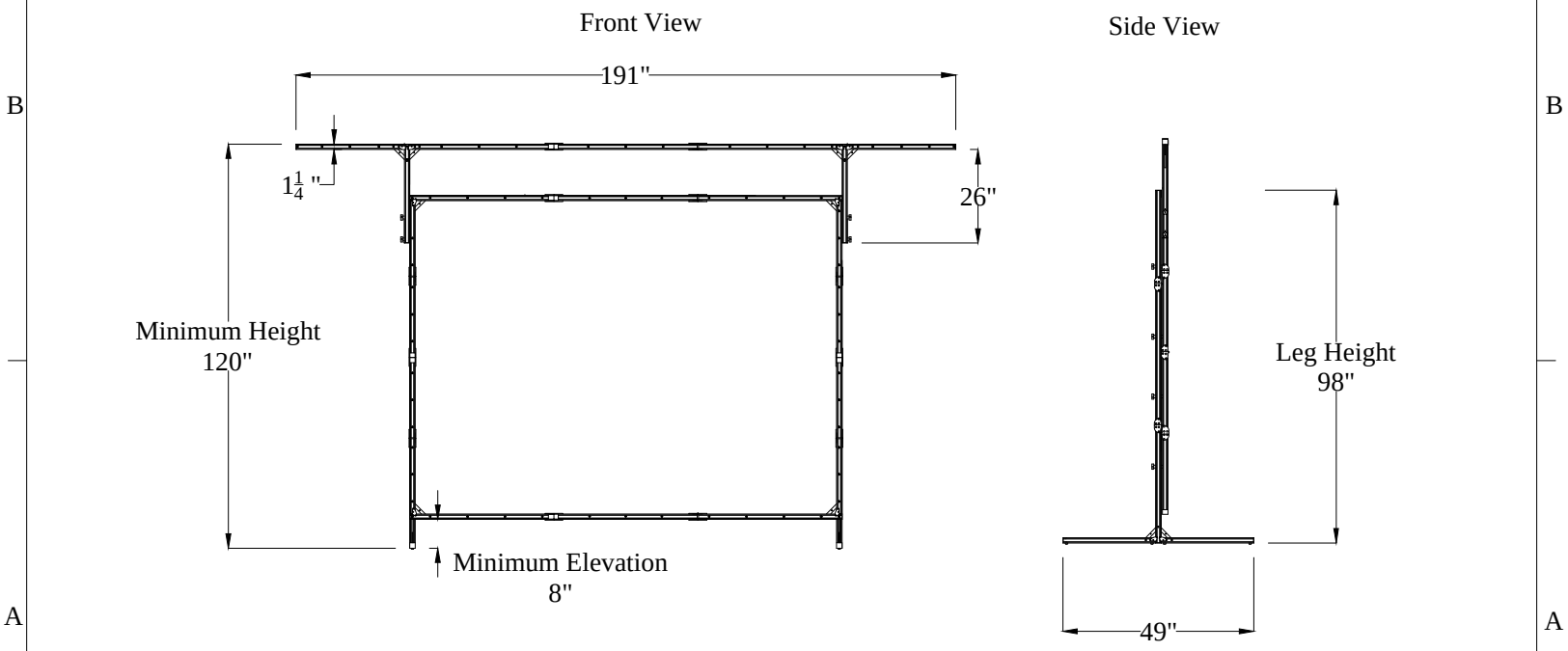

ELUNEVISION	
Title: Quick Fold Portable Screen 150" 4:3	
Product model: EV-FF-150-1.2-4:3-F/R	
Scale: 1:1	Page 1 of 3

Frame Overview
Maximum Height

100"

Drapery Kit
Included

Front View

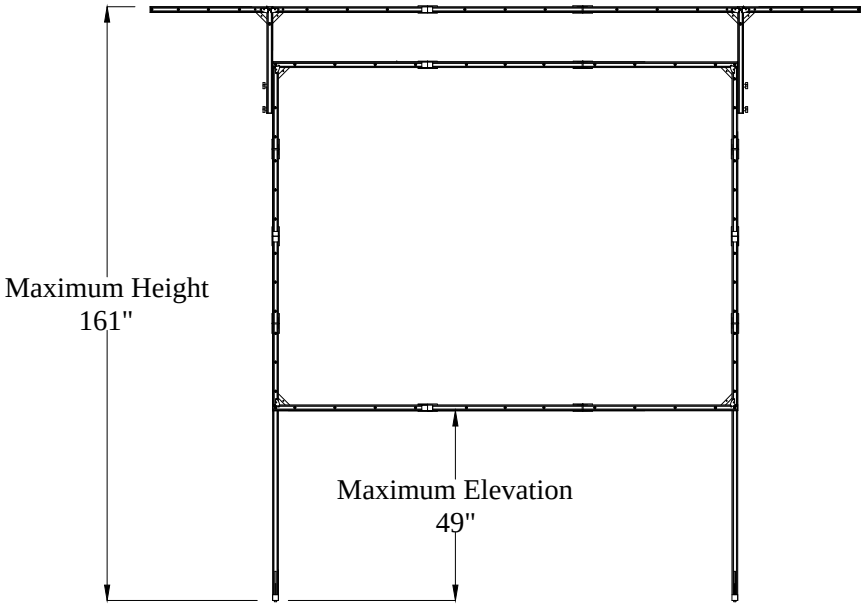

Side View

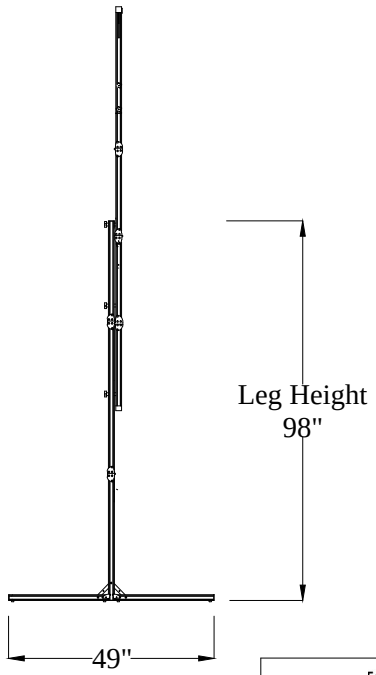

ELUNEVISION	
Title: Quick Fold Portable Screen 150" 4:3	
Product model: EV-FF-150-1.2-4:3-F/R	
Scale: 1:1	Page 2 of 3

Drapery Kit Overview

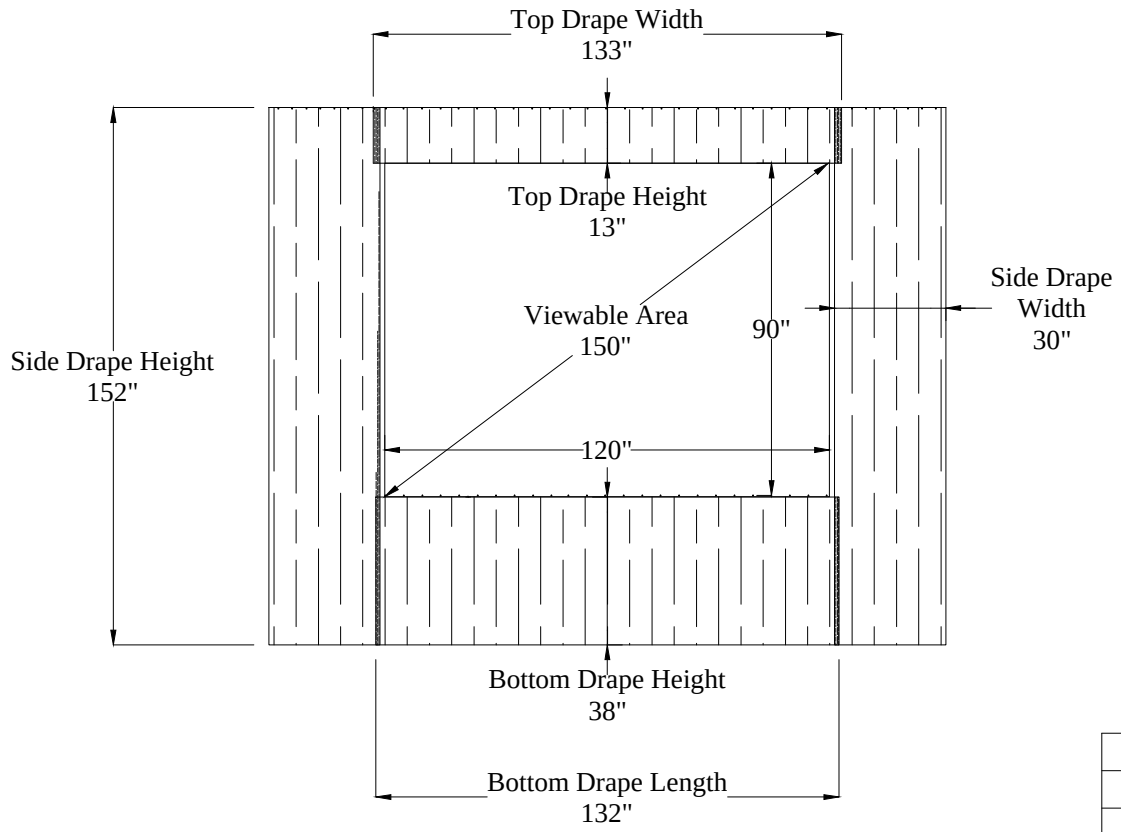

ELUNEVISION	
Title: Quick Fold Portable Screen 150" 4:3	
Product model: EV-FF-150-1.2-4:3-F/R	
Scale: 1:1	Page 3 of 3