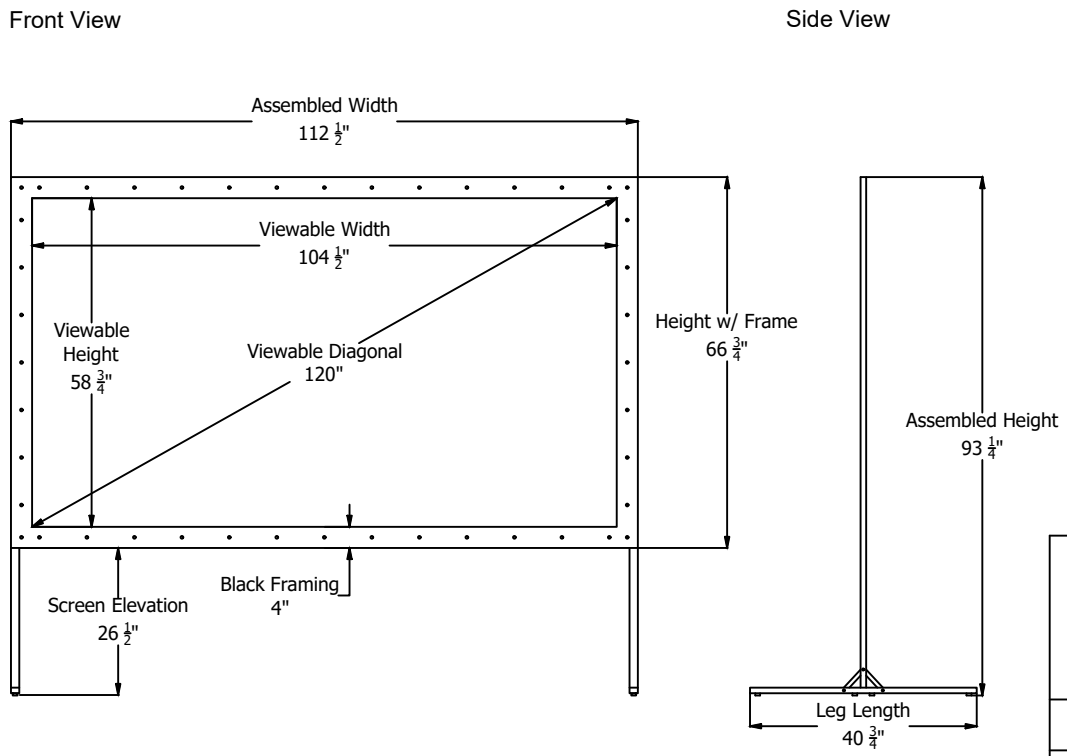

ELUNEVISION

Movie Master 120" 16:9

Product Model: EV-MM-120-1.2

not to scale

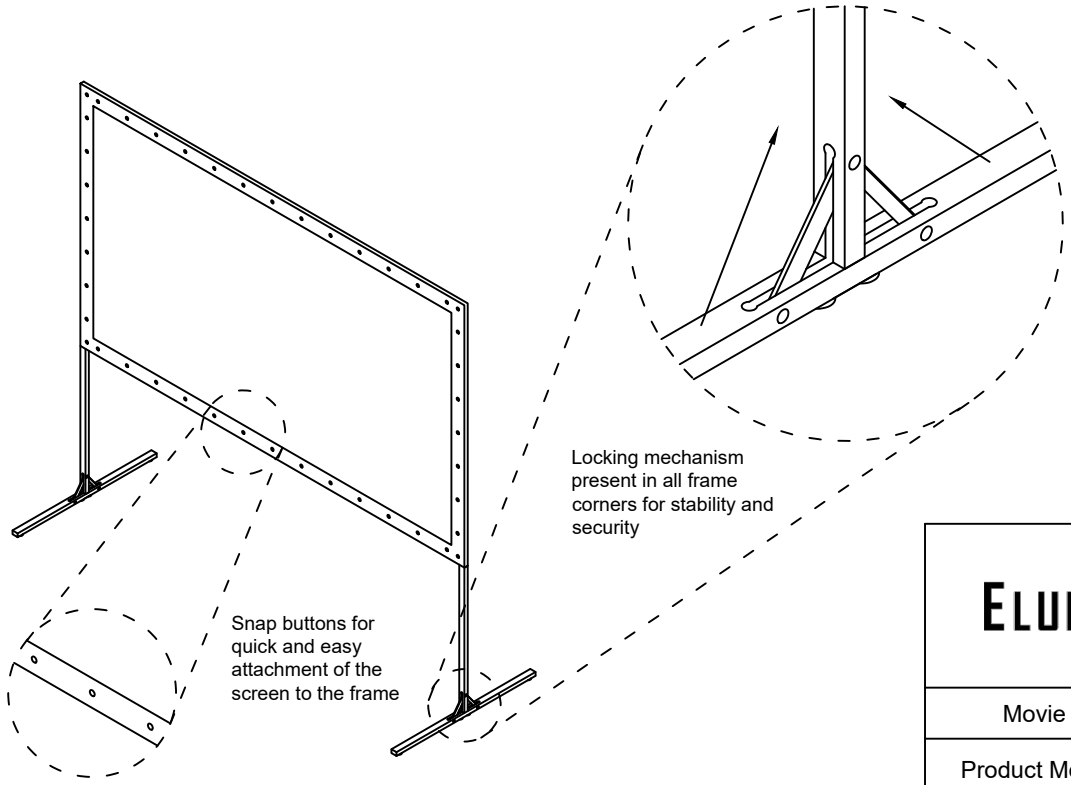

ELUNEVISION

Movie Master 120" 16:9

Product Model: EV-MM-120-1.2

not to scale