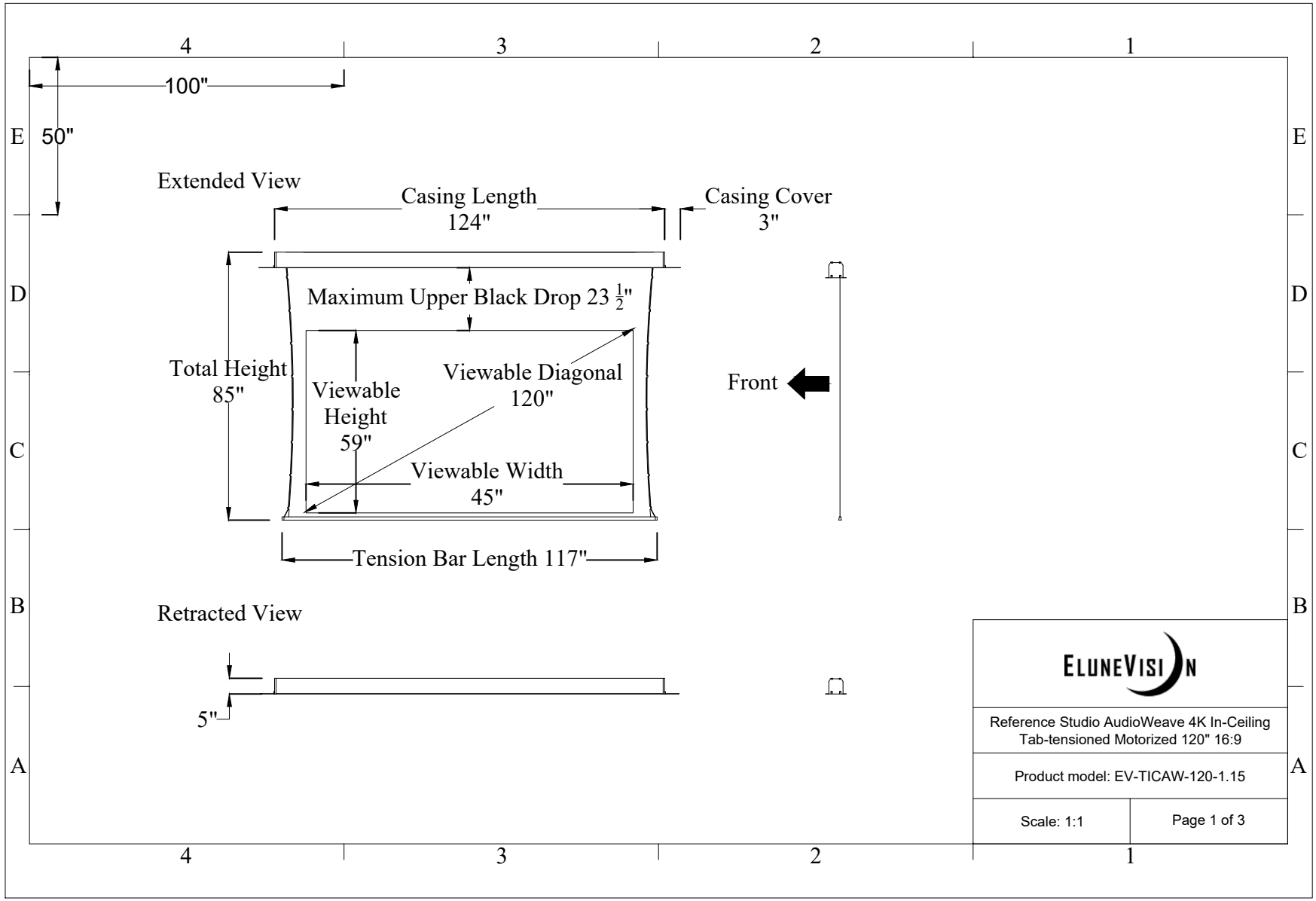
100"
50"
Extended View
Casing Length
124"
Casing Cover
3"
Maximum Upper Black Drop 23 1/2"
Total Height
85"
Viewable
Height
59"
Viewable Diagonal
120"
Viewable Width
45"
Front
Tension Bar Length 117"
Retracted View
5"
ELUNEVISION
Reference Studio AudioWeave 4K In-Ceiling
Tab-tensioned Motorized 120" 16:9
Product model: EV-TICAW-120-1.15
Scale: 1:1
Page 1 of 3

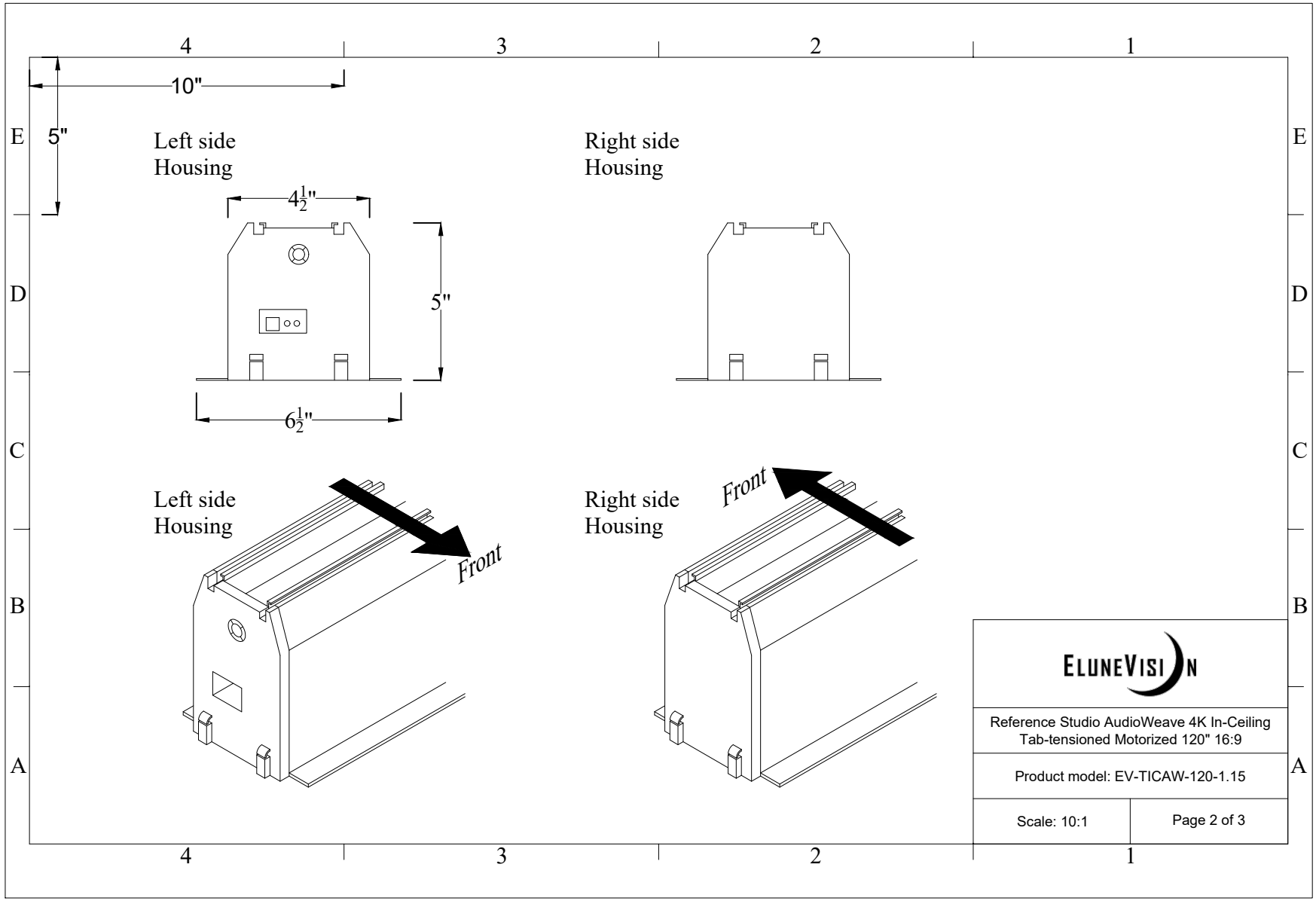

ELUNEVISION

Reference Studio AudioWeave 4K In-Ceiling
Tab-tensioned Motorized 120" 16:9

Product model: EV-TICAW-120-1.15

Scale: 10:1

Mounting Diagrams

Ceiling Opening

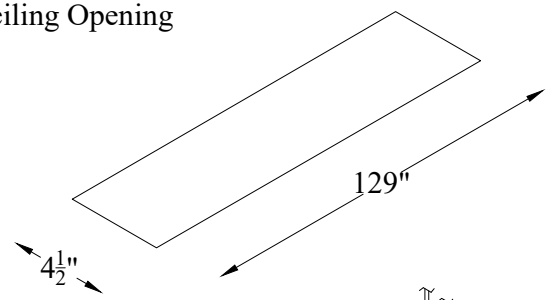

Ceiling Mount

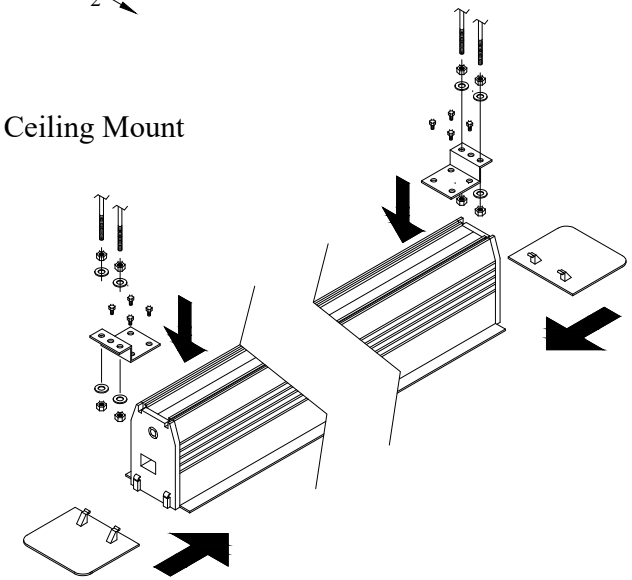

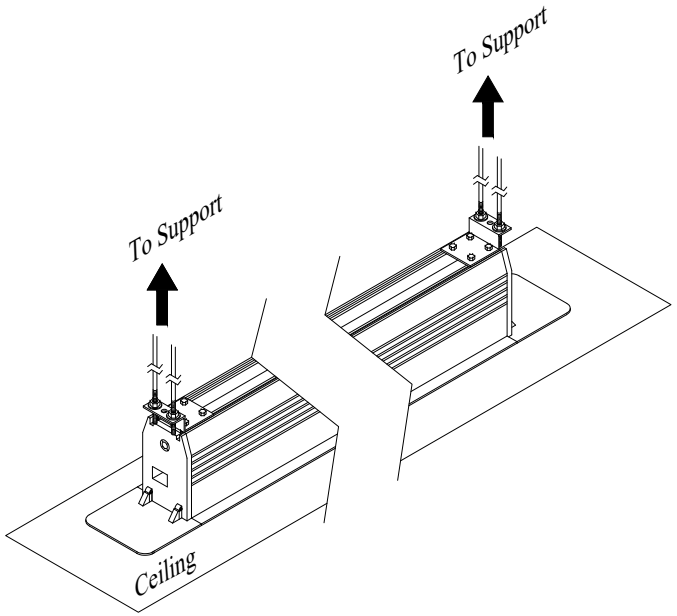

ELUNEVISION

Reference Studio AudioWeave 4K In-Ceiling
Tab-tensioned Motorized 120" 16:9

Product model: EV-TICAW-120-1.15

Not to Scale	Page 3 of 3