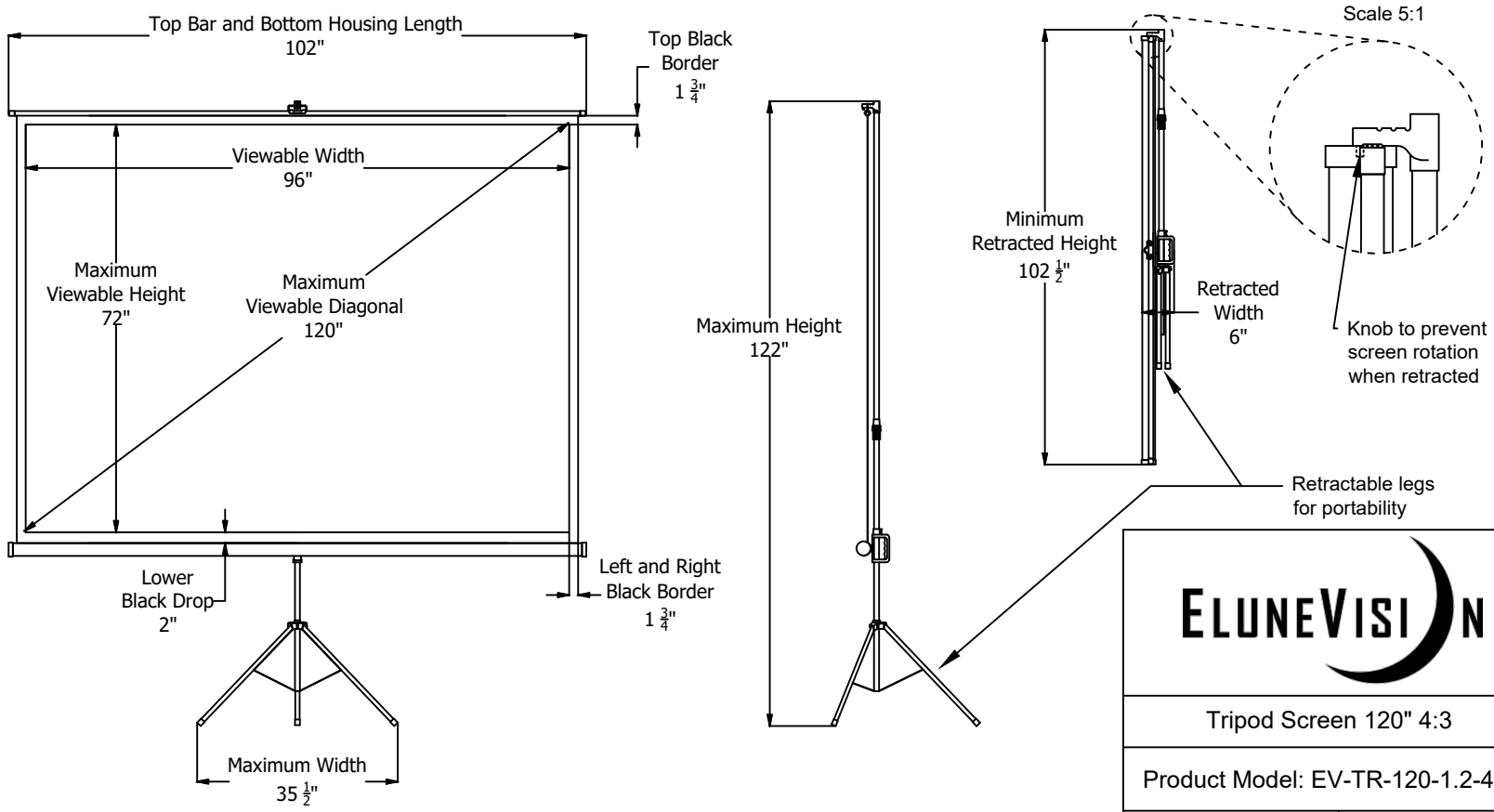

ELUNEVISION

Tripod Screen 120" 4:3

Product Model: EV-TR-120-1.2-4:3

not to scale

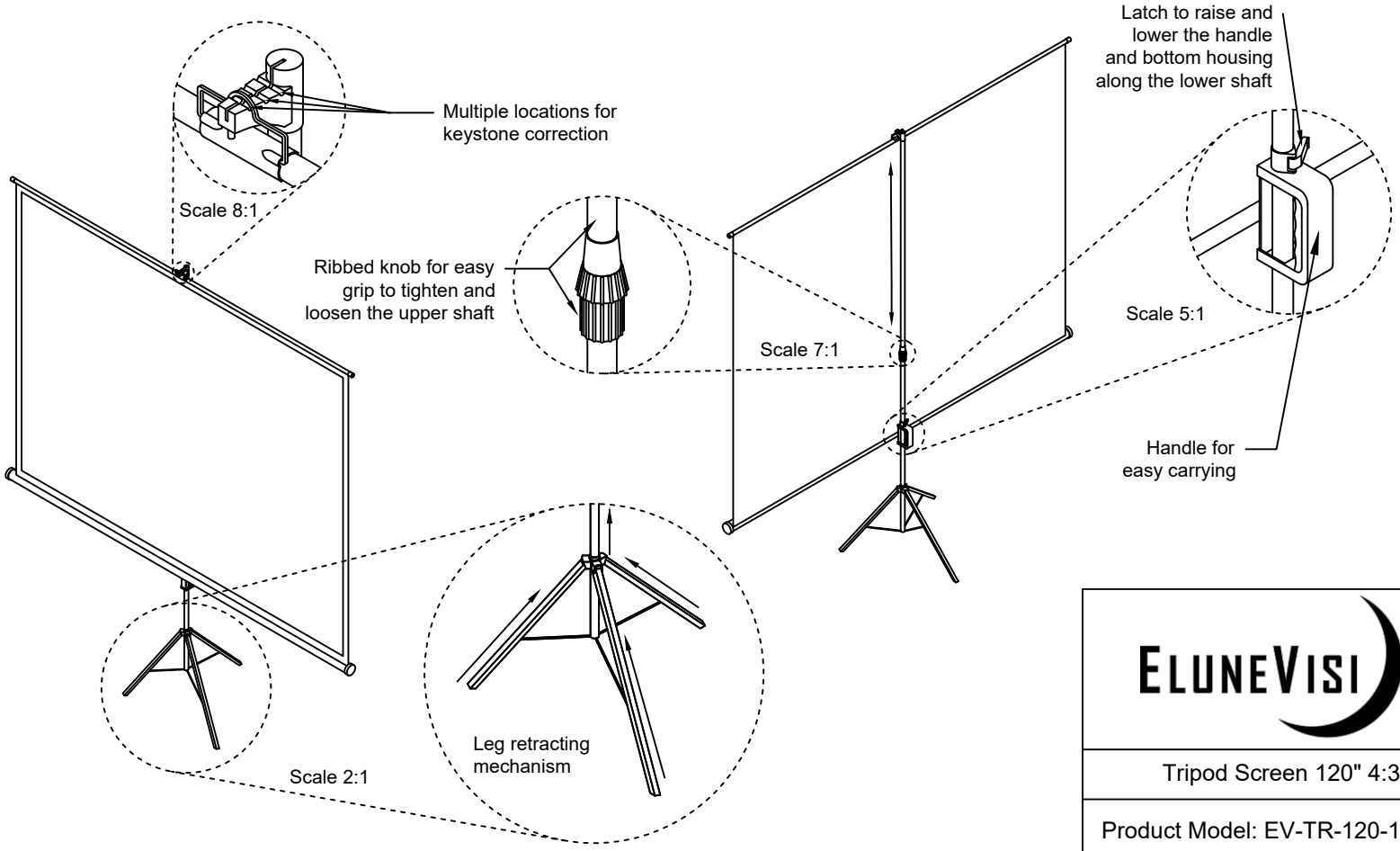

ELUNEVISION

Tripod Screen 120" 4:3

Product Model: EV-TR-120-1.2-4:3

not to scale