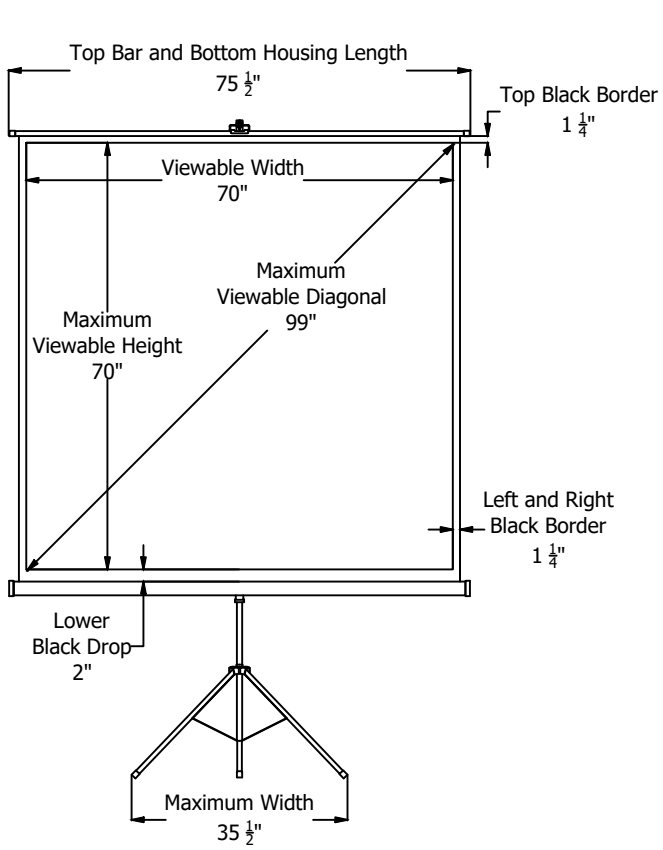

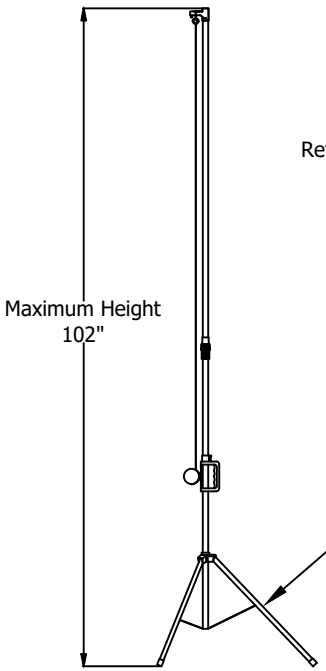

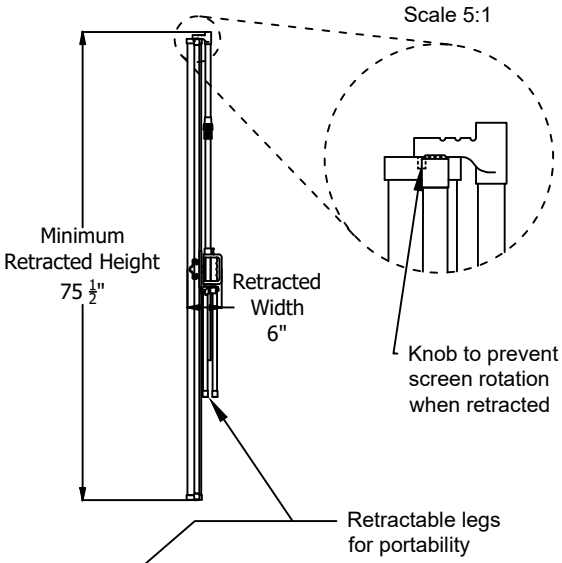

ELUNEVISION

Tripod Screen 70" × 70" 1:1

Product Model: EV-TR-70*70-1.2-1:1

not to scale

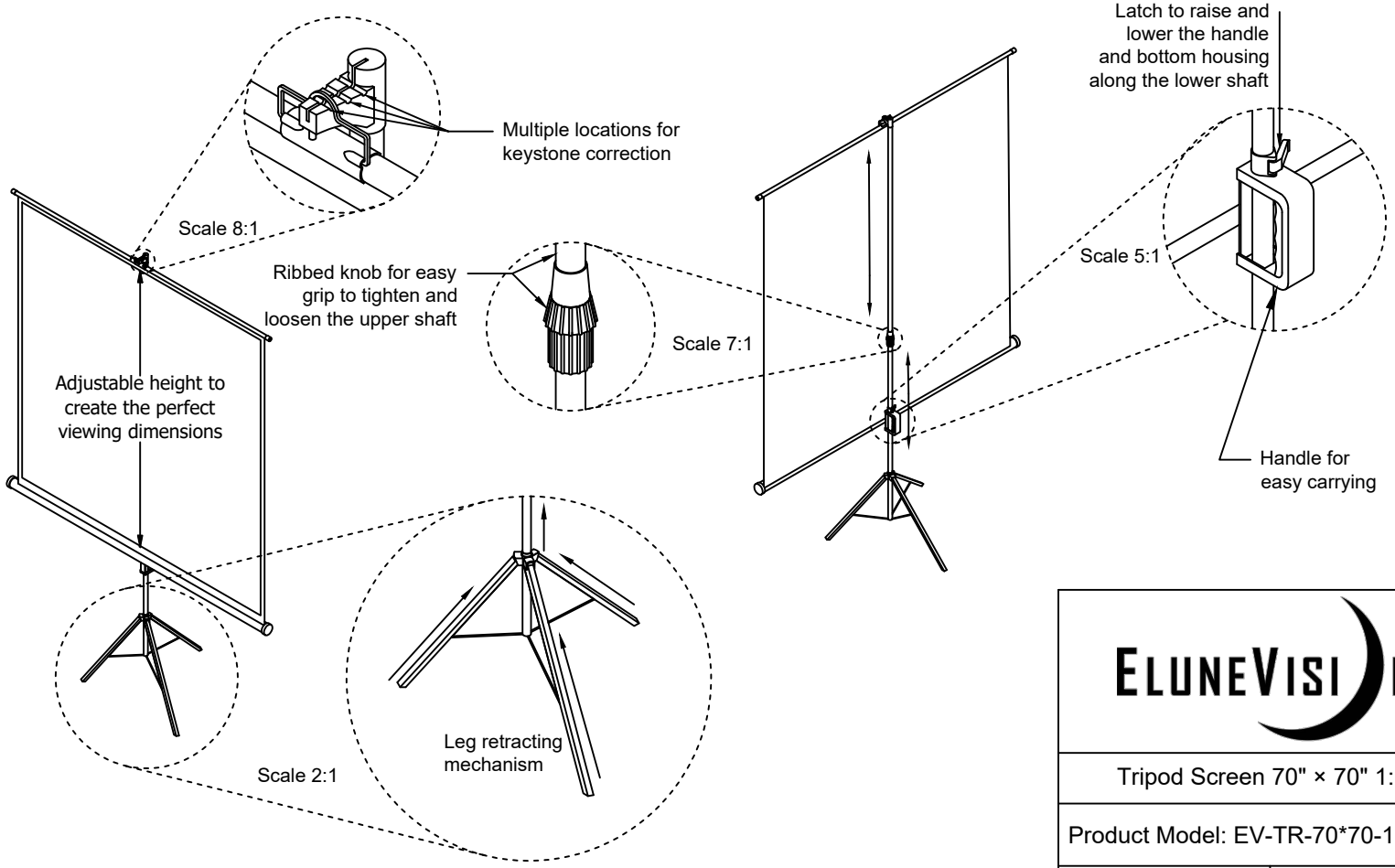

ELUNEVISION

Tripod Screen 70" × 70" 1:1

Product Model: EV-TR-70*70-1.2-1:1

not to scale	Page 2 of 2