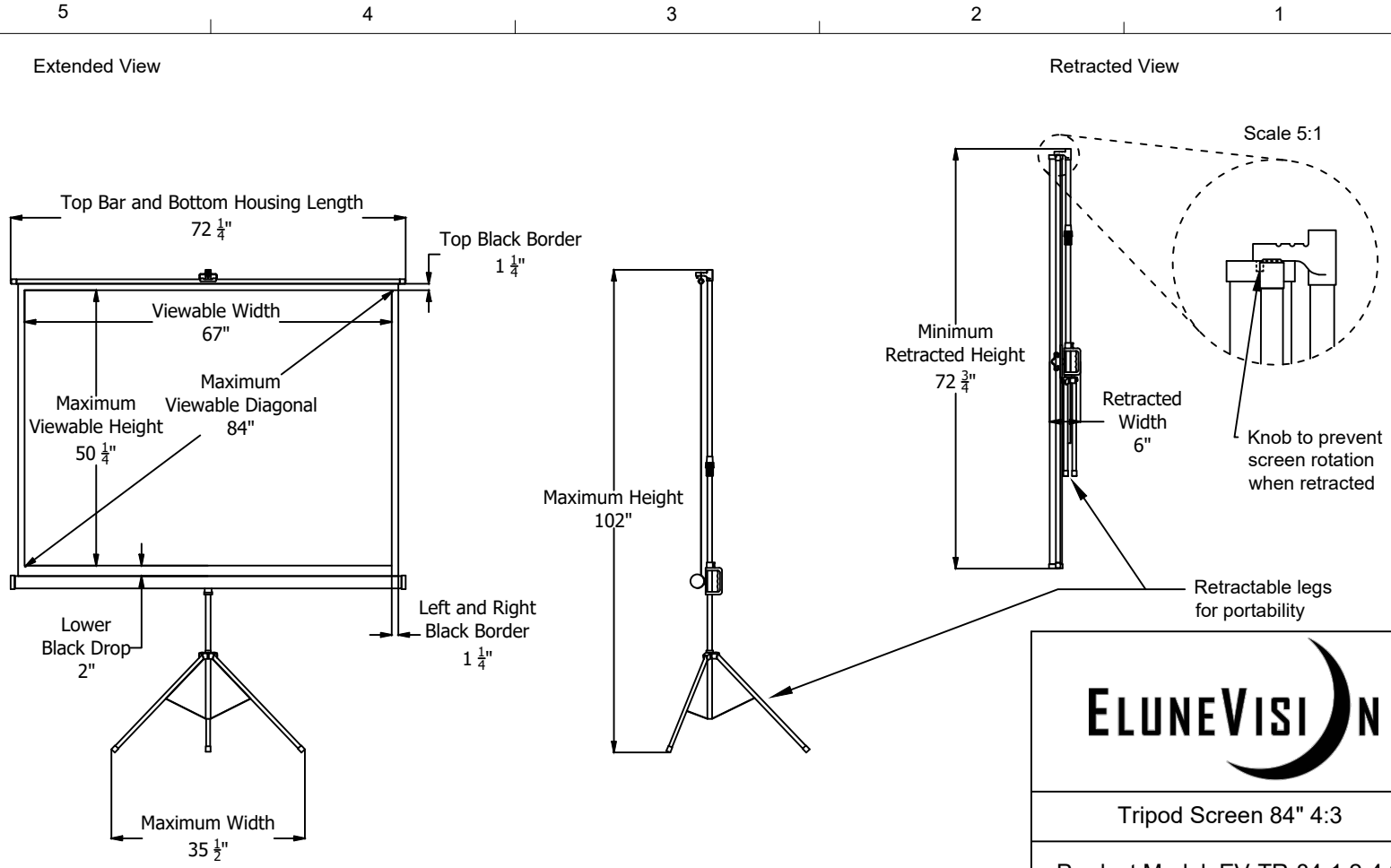

ELUNEVISION

Tripod Screen 84" 4:3

Product Model: EV-TR-84-1.2-4:3

not to scale

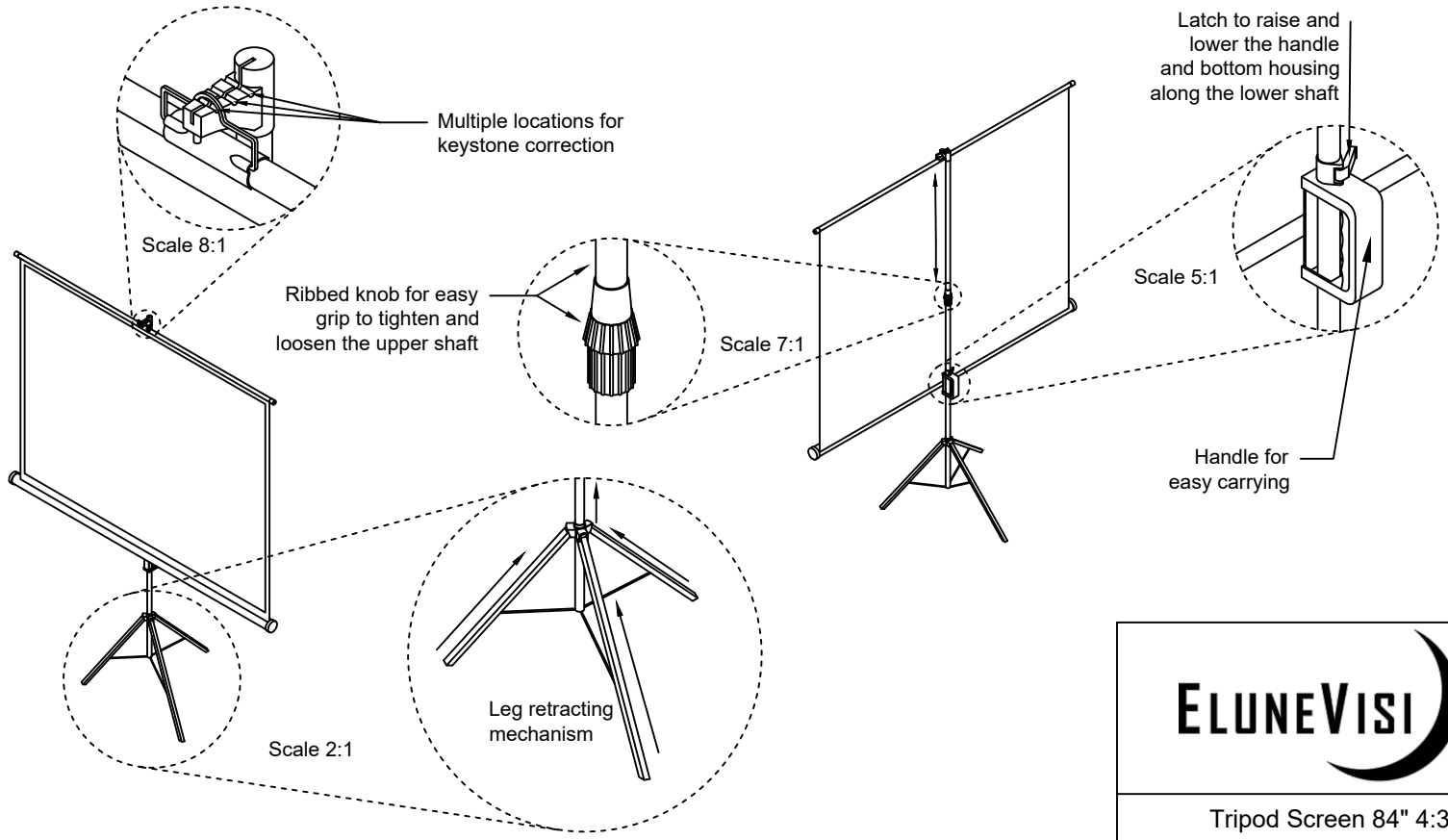

ELUNEVISION

Tripod Screen 84" 4:3

Product Model: EV-TR-84-1.2-4:3

not to scale	Page 2 of 2