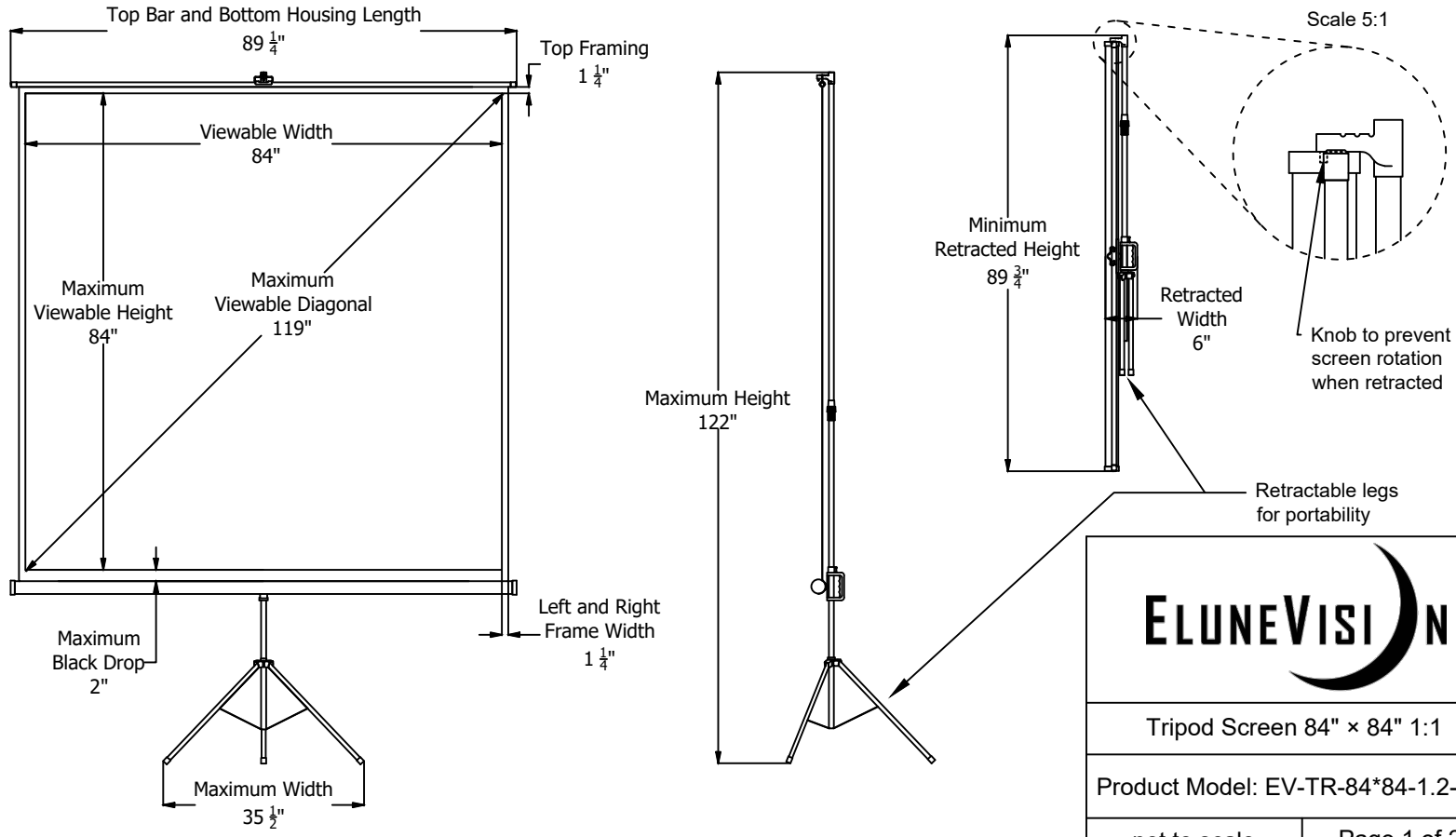


ELUNEVISION

Tripod Screen 84" × 84" 1:1

Product Model: EV-TR-84*84-1.2-1:1

not to scale

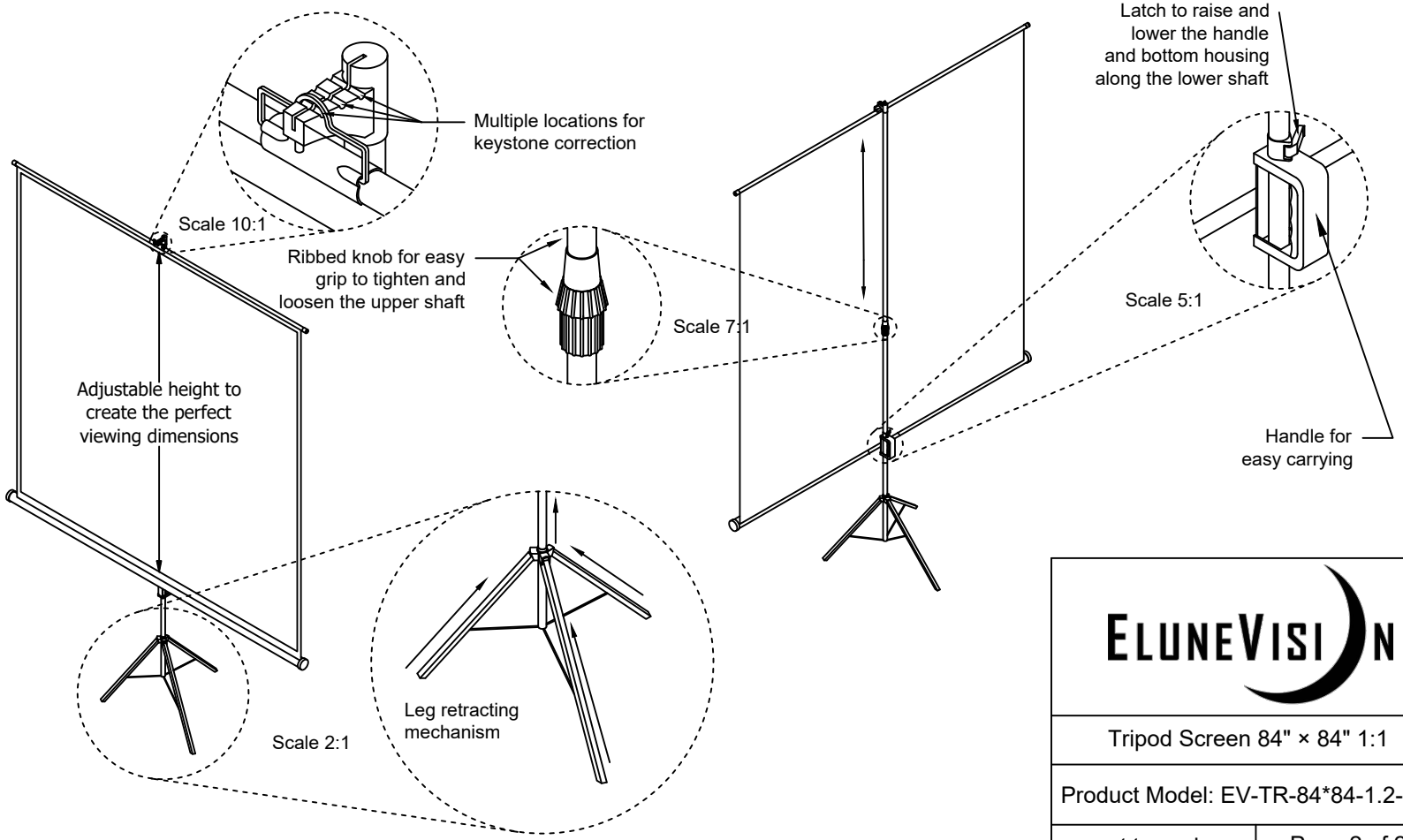


ELUNEVISION

Tripod Screen 84" × 84" 1:1

Product Model: EV-TR-84*84-1.2-1:1

| not to scale | Page 2 of 2 |
|---|---|