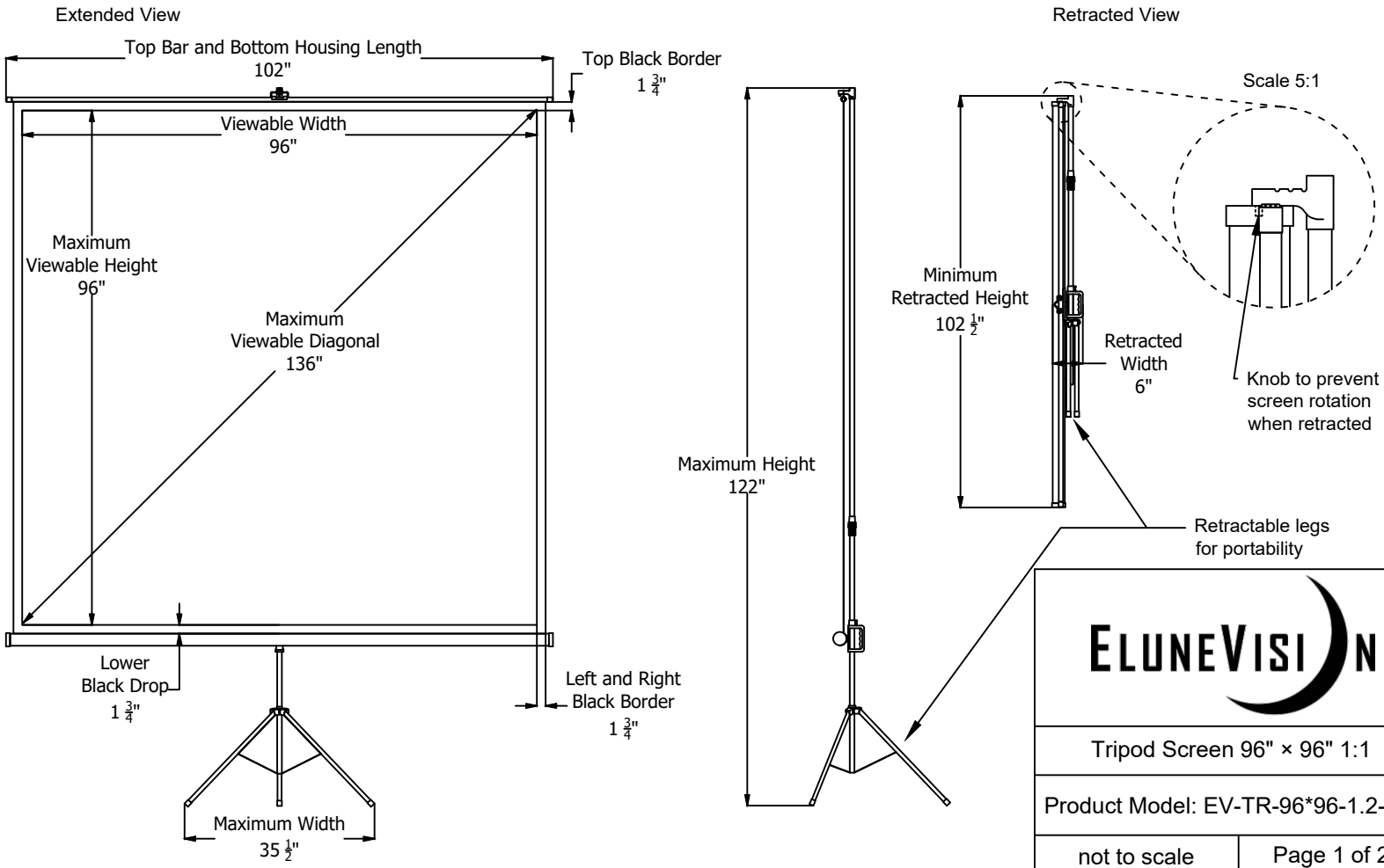

ELUNEVISION

Tripod Screen 96" × 96" 1:1

Product Model: EV-TR-96*96-1.2-1:1

not to scale

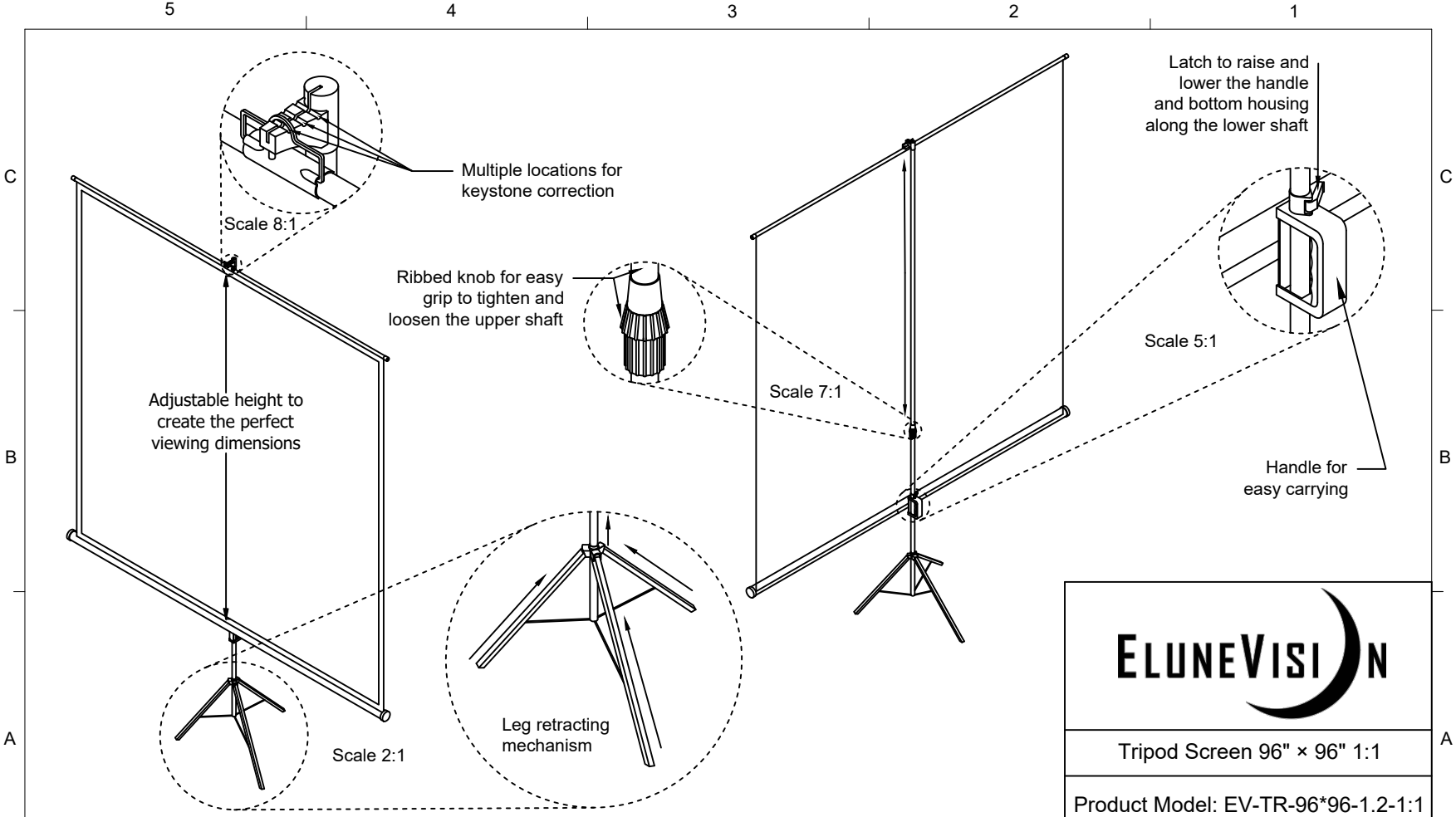

ELUNEVISION

Tripod Screen 96" × 96" 1:1

Product Model: EV-TR-96*96-1.2-1:1

not to scale	Page 2 of 2